TOSHIBA
Leading Innovation

TCTC-E18-RES003

Engineering Data Book

# *Inverter Multi System R32*

## Outdoor Unit ( 2 Rooms )

### RAS-2M14U2AVG-E

# Contents

**1 Line up. . . . . 2**
**2 Specifications . . . . . 3**
2-1 Outdoor Unit . . . . . 3
2-2 Combination . . . . . 4
**3 Cooling / Heating Capacity Characteristic . . . . . 8**
**4 Dimention . . . . . 9**
**5 Wiring . . . . . 10**
**6 Refrigerant cycle . . . . . 11**
**7 Sound Characteristics (NC Curve) . . . . . .12**
**8 Capacity table . . . . . .13**

# 1. Line up

## RAS-2M14U2AVG-E

| Type | Appearance | Model name | Capacity rank |
|---|---|---|---|
| High wall DSK9 |  | RAS-M10PKVPG-E | 10k |
| | | RAS-M13PKVPG-E | 13k |
| High wall SHORAI |  | RAS-M05PKVSG-E | 05k |
| | | RAS-M07PKVSG-E | 07k |
| | | RAS-B10PKVSG-E | 10k |
| | | RAS-B13PKVSG-E | 13k |
| High wall MIRAI |  | RAS-B05BKVG-E | 05k |
| | | RAS-B07BKVG-E | 07k |
| | | RAS-B10BKVG-E | 10k |
| | | RAS-B13BKVG-E | 13k |
| Ducted |  | RAS-M07U2DVG-E | 07k |
| | | RAS-M10U2DVG-E | 10k |
| | | RAS-M13U2DVG-E | 13k |
| Compact 4-way |  | RAS-M10U2MUVG-E | 10k |
| | | RAS-M13U2MUVG-E | 13k |
| Bi-Flow console |  | RAS-B10U2FVG-E | 10k |
| | | RAS-B13U2FVG-E | 13k |

# 2. Specifications

## 2.1 Outdoor unit : RAS-2M14U2AVG-E

| | | | | | |
|---|---|---|---|---|---|
| Unit model | Outdoor | | RAS- | 2M14U2AVG-E | |
| | Connection indoor unit of this specification | | RAS- | B13PKVSG-E (×2) | |
| Cooling Capacity (*1) | | | (kW) | 4.0 | |
| Cooling Capacity range | | | (kW) | 1.6 to 4.9 | |
| Heating Capacity (*1) | | | (kW) | 4.4 | |
| Heating Capacity range | | | (kW) | 1.3 to 5.2 | |
| -7°C Max heating | | | (kW) | 2.74 | |
| Power supply | | | | 1Ph,220-240V,50Hz | |
| Electric characteristics | Total | Operation mode | | Cooling | Heating |
| | | Running current | (A) | 4.55 / 4.35 / 4.15 | 4.40 / 4.20 / 4.05 |
| | | Power consumption | (W) | 920 | 890 |
| | | Power factor | (%) | 92 | 92 |
| | | Starting current | (A) | 4.55 / 4.35 / 4.15 | |
| EER / COP | | | | 4.35 / 4.94 | |
| SEER / SCOP | | | | 6.73 / 4.60 | |
| Operating noise | Outdoor (Cooling/Heating) | Sound pressure level | (dBA) | 45 / 46 | |
| | | Sound power level | (dBA) | 58 / 59 | |
| Outdoor unit | Dimension | Height | (mm) | 630 | |
| | | Width | (mm) | 800 | |
| | | Depth | (mm) | 300 | |
| | Net weight | | (kg) | 43 | |
| | Compressor | Motor output | (W) | 1050 | |
| | | Type | | Single rotary type with DC-inverter variable speed control | |
| | | Model | | KTN130D3UFZ | |
| | Fan motor output | | (W) | 43 | |
| | Air flow rate (Cooling/Heating) | | (m³/h) | 1863 / 1863 | |
| | Type | | | Flare connection | |
| | Name of refirigerant | | | R32 | |
| | Weight of refigerant | | (kg) | 1.02 | |
| Piping connection | Outdoor unit | A unit liquid side/gas side | | Ø6.35 / Ø9.52 | |
| | | B unit liquid side/gas side | | Ø6.35 / Ø9.52 | |
| | | C unit liquid side/gas side | | - | |
| | Maximum length (per unit) | | (m) | 20 | |
| | Maximum length (total) | | (m) | 30 | |
| | Maximum chargeless length | | (m) | 30 | |
| | Maximum height difference | | (m) | 10 | |
| Wiring connection | Power supply / interconnection | | | 3 Wires : includes earth / 4 Wires : includes earth | |
| Usable temperature range | Outdoor (Cooling/Heating) | | (℃) | -10 to 46℃ / -20 to 24℃ | |
| Accessory Outdoor unit | Installation manual | | | 1 | |

• For performance when each indoor unit is combined with other unit, refer to the separate table.
• The specifications may be subject to change without notice for purpose of improvement.
• (*1) Rated conditions
Cooling : Capacity test condition, inside : 27 °C (Db) / 19 °C (Wb), outside : 35 °C (Db) / 24 °C (Wb)
Heating : Capacity test condition, inside : 20 °C (Db), outside : 7 °C (Db) / 6°C (Wb)
Piping length : 5 m per Indoor Unit.

## 2.2 Combination

Operation mode : Cooling

Power supply voltage : 220V

| Operating status | Indoor unit | | | | Unit capacity (kW) | | | Total | | | | |
|---|---|---|---|---|---|---|---|---|---|---|---|---|
| | A | B | C | ΣkBTU | A | B | C | Cooling capacity (kW) | Power consumption (W) | Operating current (A) | Power factor (%) | Rated SEER |
| 1 unit | 05 | - | - | 5 | 1.50 | - | - | 1.50 ( 1.20 - 1.80 ) | 310 ( 240 - 380 ) | 1.67 ( 1.52 - 1.89 ) | 84 ( 72 - 92 ) | - |
| | 07 | - | - | 7 | 2.00 | - | - | 2.00 ( 1.30 - 2.50 ) | 420 ( 240 - 590 ) | 2.25 ( 1.52 - 2.93 ) | 85 ( 72 - 92 ) | - |
| | 10 | - | - | 10 | 2.70 | - | - | 2.70 ( 1.30 - 3.20 ) | 640 ( 240 - 860 ) | 3.40 ( 1.52 - 4.20 ) | 86 ( 72 - 93 ) | - |
| | 13 | - | - | 13 | 3.70 | - | - | 3.70 ( 1.30 - 4.10 ) | 1050 ( 240 - 1190 ) | 5.49 ( 1.52 - 5.80 ) | 87 ( 72 - 93 ) | - |
| 2 units | 05 | 05 | - | 10 | 1.50 | 1.50 | - | 3.00 ( 1.60 - 4.20 ) | 910 ( 290 - 1130 ) | 4.50 ( 1.84 - 5.45 ) | 92 ( 72 - 94 ) | 5.10 |
| | 07 | 05 | - | 12 | 2.00 | 1.50 | - | 3.50 ( 1.60 - 4.30 ) | 960 ( 290 - 1130 ) | 4.75 ( 1.84 - 5.45 ) | 92 ( 72 - 94 ) | 5.64 |
| | 10 | 05 | - | 15 | 2.57 | 1.43 | - | 4.00 ( 1.60 - 4.40 ) | 1030 ( 290 - 1130 ) | 5.12 ( 1.84 - 5.45 ) | 92 ( 72 - 94 ) | 6.01 |
| | 13 | 05 | - | 18 | 2.85 | 1.15 | - | 4.00 ( 1.60 - 4.50 ) | 960 ( 290 - 1130 ) | 4.75 ( 1.84 - 5.45 ) | 92 ( 72 - 94 ) | 6.45 |
| | 07 | 07 | - | 14 | 2.00 | 2.00 | - | 4.00 ( 1.60 - 4.50 ) | 1030 ( 290 - 1130 ) | 5.12 ( 1.84 - 5.45 ) | 92 ( 72 - 94 ) | 6.55 |
| | 10 | 07 | - | 17 | 2.30 | 1.70 | - | 4.00 ( 1.60 - 4.60 ) | 960 ( 290 - 1130 ) | 4.75 ( 1.84 - 5.45 ) | 92 ( 72 - 94 ) | 6.58 |
| | 13 | 07 | - | 20 | 2.60 | 1.40 | - | 4.00 ( 1.60 - 4.70 ) | 940 ( 290 - 1140 ) | 4.65 ( 1.84 - 5.50 ) | 92 ( 72 - 94 ) | 6.65 |
| | 10 | 10 | - | 20 | 2.00 | 2.00 | - | 4.00 ( 1.60 - 4.70 ) | 940 ( 290 - 1140 ) | 4.65 ( 1.84 - 5.50 ) | 92 ( 72 - 94 ) | 6.63 |
| | 13 | 10 | - | 23 | 2.31 | 1.69 | - | 4.00 ( 1.60 - 4.80 ) | 930 ( 290 - 1150 ) | 4.59 ( 1.84 - 5.55 ) | 92 ( 72 - 94 ) | 6.70 |
| | 13 | 13 | - | 26 | 2.00 | 2.00 | - | 4.00 ( 1.60 - 4.90 ) | 920 ( 290 - 1150 ) | 4.55 ( 1.84 - 5.55 ) | 92 ( 72 - 94 ) | 6.73 |

Power supply voltage : 230V

| Operating status | Indoor unit | | | | Unit capacity (kW) | | | Total | | | | |
|---|---|---|---|---|---|---|---|---|---|---|---|---|
| | A | B | C | ΣkBTU | A | B | C | Cooling capacity (kW) | Power consumption (W) | Operating current (A) | Power factor (%) | Rated SEER |
| 1 unit | 05 | - | - | 5 | 1.50 | - | - | 1.50 ( 1.20 - 1.80 ) | 310 ( 240 - 380 ) | 1.60 ( 1.45 - 1.80 ) | 84 ( 72 - 92 ) | - |
| | 07 | - | - | 7 | 2.00 | - | - | 2.00 ( 1.30 - 2.50 ) | 420 ( 240 - 590 ) | 2.15 ( 1.45 - 2.80 ) | 85 ( 72 - 92 ) | - |
| | 10 | - | - | 10 | 2.70 | - | - | 2.70 ( 1.30 - 3.20 ) | 640 ( 240 - 860 ) | 3.25 ( 1.45 - 4.00 ) | 86 ( 72 - 93 ) | - |
| | 13 | - | - | 13 | 3.70 | - | - | 3.70 ( 1.30 - 4.10 ) | 1050 ( 240 - 1190 ) | 5.25 ( 1.45 - 5.55 ) | 87 ( 72 - 93 ) | - |
| 2 units | 05 | 05 | - | 10 | 1.50 | 1.50 | - | 3.00 ( 1.60 - 4.20 ) | 910 ( 290 - 1130 ) | 4.30 ( 1.76 - 5.23 ) | 92 ( 72 - 94 ) | 5.10 |
| | 07 | 05 | - | 12 | 2.00 | 1.50 | - | 3.50 ( 1.60 - 4.30 ) | 960 ( 290 - 1130 ) | 4.55 ( 1.76 - 5.23 ) | 92 ( 72 - 94 ) | 5.64 |
| | 10 | 05 | - | 15 | 2.57 | 1.43 | - | 4.00 ( 1.60 - 4.40 ) | 1030 ( 290 - 1130 ) | 4.89 ( 1.76 - 5.23 ) | 92 ( 72 - 94 ) | 6.01 |
| | 13 | 05 | - | 18 | 2.85 | 1.15 | - | 4.00 ( 1.60 - 4.50 ) | 960 ( 290 - 1130 ) | 4.55 ( 1.76 - 5.23 ) | 92 ( 72 - 94 ) | 6.45 |
| | 07 | 07 | - | 14 | 2.00 | 2.00 | - | 4.00 ( 1.60 - 4.50 ) | 1030 ( 290 - 1130 ) | 4.89 ( 1.76 - 5.23 ) | 92 ( 72 - 94 ) | 6.55 |
| | 10 | 07 | - | 17 | 2.30 | 1.70 | - | 4.00 ( 1.60 - 4.60 ) | 960 ( 290 - 1130 ) | 4.55 ( 1.76 - 5.23 ) | 92 ( 72 - 94 ) | 6.58 |
| | 13 | 07 | - | 20 | 2.60 | 1.40 | - | 4.00 ( 1.60 - 4.70 ) | 940 ( 290 - 1140 ) | 4.45 ( 1.76 - 5.27 ) | 92 ( 72 - 94 ) | 6.65 |
| | 10 | 10 | - | 20 | 2.00 | 2.00 | - | 4.00 ( 1.60 - 4.70 ) | 940 ( 290 - 1140 ) | 4.45 ( 1.76 - 5.30 ) | 92 ( 72 - 94 ) | 6.63 |
| | 13 | 10 | - | 23 | 2.31 | 1.69 | - | 4.00 ( 1.60 - 4.80 ) | 930 ( 290 - 1150 ) | 4.40 ( 1.76 - 5.35 ) | 92 ( 72 - 94 ) | 6.70 |
| | 13 | 13 | - | 26 | 2.00 | 2.00 | - | 4.00 ( 1.60 - 4.90 ) | 920 ( 290 - 1150 ) | 4.35 ( 1.76 - 5.30 ) | 92 ( 72 - 94 ) | 6.73 |

## Power supply voltage : 240V

| Operating status | Indoor unit | | | | Unit capacity (kW) | | | Total | | | | |
|---|---|---|---|---|---|---|---|---|---|---|---|---|
| | | | | | | | | Cooling capacity (kW) | Power consumption (W) | Operating current (A) | Power factor (%) | Rated SEER |
| | A | B | C | ΣkBTU | A | B | C | | | | | |
| 1 unit | 05 | - | - | 5 | 1.50 | - | - | 1.50 ( 1.20 - 1.80 ) | 310 ( 240 - 380 ) | 1.53 ( 1.40 - 1.73 ) | 85 ( 72 - 92 ) | - |
| | 07 | - | - | 7 | 2.00 | - | - | 2.00 ( 1.30 - 2.50 ) | 420 ( 240 - 590 ) | 2.05 ( 1.40 - 2.69 ) | 85 ( 72 - 92 ) | - |
| | 10 | - | - | 10 | 2.70 | - | - | 2.70 ( 1.30 - 3.20 ) | 640 ( 240 - 860 ) | 3.10 ( 1.40 - 3.85 ) | 86 ( 72 - 93 ) | - |
| | 13 | - | - | 13 | 3.70 | - | - | 3.70 ( 1.30 - 4.10 ) | 1050 ( 240 - 1190 ) | 5.05 ( 1.40 - 5.35 ) | 87 ( 72 - 93 ) | - |
| 2 units | 05 | 05 | - | 10 | 1.50 | 1.50 | - | 3.00 ( 1.60 - 4.20 ) | 910 ( 290 - 1130 ) | 4.12 ( 1.68 - 5.01 ) | 92 ( 72 - 94 ) | 5.10 |
| | 07 | 05 | - | 12 | 2.00 | 1.50 | - | 3.50 ( 1.60 - 4.30 ) | 960 ( 290 - 1130 ) | 4.35 ( 1.68 - 5.00 ) | 92 ( 72 - 94 ) | 5.64 |
| | 10 | 05 | - | 15 | 2.57 | 1.43 | - | 4.00 ( 1.60 - 4.40 ) | 1030 ( 290 - 1130 ) | 4.69 ( 1.68 - 5.00 ) | 92 ( 72 - 94 ) | 6.01 |
| | 13 | 05 | - | 18 | 2.85 | 1.15 | - | 4.00 ( 1.60 - 4.50 ) | 960 ( 290 - 1130 ) | 4.36 ( 1.68 - 5.00 ) | 92 ( 72 - 94 ) | 6.45 |
| | 07 | 07 | - | 14 | 2.00 | 2.00 | - | 4.00 ( 1.60 - 4.50 ) | 1030 ( 290 - 1130 ) | 4.69 ( 1.68 - 5.00 ) | 92 ( 72 - 94 ) | 6.55 |
| | 10 | 07 | - | 17 | 2.30 | 1.70 | - | 4.00 ( 1.60 - 4.60 ) | 960 ( 290 - 1130 ) | 4.36 ( 1.68 - 5.00 ) | 92 ( 72 - 94 ) | 6.58 |
| | 13 | 07 | - | 20 | 2.60 | 1.40 | - | 4.00 ( 1.60 - 4.70 ) | 940 ( 290 - 1140 ) | 4.27 ( 1.68 - 5.05 ) | 92 ( 72 - 94 ) | 6.65 |
| | 10 | 10 | - | 20 | 2.00 | 2.00 | - | 4.00 ( 1.60 - 4.70 ) | 940 ( 290 - 1140 ) | 4.27 ( 1.68 - 5.05 ) | 92 ( 72 - 94 ) | 6.63 |
| | 13 | 10 | - | 23 | 2.31 | 1.69 | - | 4.00 ( 1.60 - 4.80 ) | 930 ( 290 - 1150 ) | 4.21 ( 1.68 - 5.10 ) | 92 ( 72 - 94 ) | 6.70 |
| | 13 | 13 | - | 26 | 2.00 | 2.00 | - | 4.00 ( 1.60 - 4.90 ) | 920 ( 290 - 1150 ) | 4.15 ( 1.68 - 5.10 ) | 92 ( 72 - 94 ) | 6.73 |

• Specification values are those under the condition as follows ;
Cooling : Capacity test condition, inside : 27 °C (Db) / 19 °C (Wb), outside : 35 °C (Db) / 24 °C (Wb)
Piping length : 5 m per Indoor Unit.

Operation mode : Heating

Power supply voltage : 220V

| Operating status | Indoor unit | | | | Unit capacity (kW) | | | Total | | | | |
|---|---|---|---|---|---|---|---|---|---|---|---|---|
| | | | | | | | | Heating capacity (kW) | Power consumption (W) | Operating current (A) | Power factor (%) | Rated SCOP |
| | A | B | C | ΣkBTU | A | B | C | | | | | |
| 1 unit | 05 | - | - | 5 | 2.00 | - | - | 2.0 ( 0.9 - 2.5 ) | 440 ( 190 - 580 ) | 2.40 ( 1.20 - 2.88 ) | 84 ( 72 - 92 ) | - |
| | 07 | - | - | 7 | 2.70 | - | - | 2.7 ( 0.9 - 3.4 ) | 610 ( 190 - 820 ) | 3.30 ( 1.20 - 4.07 ) | 84 ( 72 - 92 ) | - |
| | 10 | - | - | 10 | 4.00 | - | - | 4.0 ( 0.9 - 4.8 ) | 1050 ( 190 - 1380 ) | 5.60 ( 1.20 - 6.75 ) | 85 ( 72 - 93 ) | - |
| | 13 | - | - | 13 | 4.40 | - | - | 4.4 ( 1.0 - 5.2 ) | 1350 ( 210 - 1410 ) | 7.14 ( 1.33 - 6.90 ) | 86 ( 72 - 93 ) | - |
| 2 units | 05 | 05 | - | 10 | 2.00 | 2.00 | - | 4.0 ( 1.3 - 4.7 ) | 920 ( 250 - 1270 ) | 4.55 ( 1.58 - 6.15 ) | 92 ( 72 - 94 ) | 3.82 |
| | 07 | 05 | - | 12 | 2.70 | 2.00 | - | 4.4 ( 1.3 - 4.8 ) | 960 ( 250 - 1270 ) | 4.74 ( 1.58 - 6.15 ) | 92 ( 72 - 94 ) | 4.09 |
| | 10 | 05 | - | 15 | 3.73 | 1.87 | - | 4.4 ( 1.3 - 4.9 ) | 960 ( 250 - 1270 ) | 4.74 ( 1.58 - 6.15 ) | 92 ( 72 - 94 ) | 4.09 |
| | 13 | 05 | - | 18 | 4.00 | 1.60 | - | 4.4 ( 1.3 - 5.0 ) | 950 ( 250 - 1250 ) | 4.69 ( 1.58 - 6.05 ) | 92 ( 72 - 94 ) | 4.13 |
| | 07 | 07 | - | 14 | 2.70 | 2.70 | - | 4.4 ( 1.3 - 5.1 ) | 960 ( 250 - 1270 ) | 4.74 ( 1.58 - 6.15 ) | 92 ( 72 - 94 ) | 4.31 |
| | 10 | 07 | - | 17 | 3.34 | 2.26 | - | 4.4 ( 1.3 - 5.1 ) | 950 ( 250 - 1250 ) | 4.69 ( 1.58 - 6.05 ) | 92 ( 72 - 94 ) | 4.33 |
| | 13 | 07 | - | 20 | 3.64 | 1.96 | - | 4.4 ( 1.3 - 5.2 ) | 920 ( 250 - 1250 ) | 4.55 ( 1.58 - 6.05 ) | 92 ( 72 - 94 ) | 4.37 |
| | 10 | 10 | - | 20 | 2.80 | 2.80 | - | 4.4 ( 1.3 - 5.1 ) | 930 ( 250 - 1230 ) | 4.59 ( 1.58 - 5.95 ) | 92 ( 72 - 94 ) | 4.35 |
| | 13 | 10 | - | 23 | 2.30 | 2.10 | - | 4.4 ( 1.3 - 5.2 ) | 910 ( 250 - 1230 ) | 4.50 ( 1.58 - 5.95 ) | 92 ( 72 - 94 ) | 4.39 |
| | 13 | 13 | - | 26 | 2.20 | 2.20 | - | 4.4 ( 1.3 - 5.2 ) | 890 ( 250 - 1220 ) | 4.40 ( 1.52 - 5.90 ) | 92 ( 75 - 94 ) | 4.60 |

Power supply voltage : 230V

| Operating status | Indoor unit | | | | Unit capacity (kW) | | | Total | | | | |
|---|---|---|---|---|---|---|---|---|---|---|---|---|
| | | | | | | | | Heating capacity (kW) | Power consumption (W) | Operating current (A) | Power factor (%) | Rated SCOP |
| | A | B | C | ΣkBTU | A | B | C | | | | | |
| 1 unit | 05 | - | - | 5 | 2.00 | - | - | 2.0 ( 0.9 - 2.5 ) | 440 ( 190 - 580 ) | 2.28 ( 1.15 - 2.75 ) | 84 ( 72 - 92 ) | - |
| | 07 | - | - | 7 | 2.70 | - | - | 2.7 ( 0.9 - 3.4 ) | 610 ( 190 - 820 ) | 3.16 ( 1.15 - 3.90 ) | 84 ( 72 - 92 ) | - |
| | 10 | - | - | 10 | 4.00 | - | - | 4.0 ( 0.9 - 4.8 ) | 1050 ( 190 - 1380 ) | 5.37 ( 1.15 - 6.45 ) | 85 ( 72 - 93 ) | - |
| | 13 | - | - | 13 | 4.40 | - | - | 4.4 ( 1.0 - 5.2 ) | 1350 ( 210 - 1410 ) | 6.83 ( 1.27 - 6.61 ) | 86 ( 72 - 93 ) | - |
| 2 units | 05 | 05 | - | 10 | 2.00 | 2.00 | - | 4.0 ( 1.3 - 4.7 ) | 920 ( 250 - 1270 ) | 4.34 ( 1.52 - 5.90 ) | 92 ( 72 - 94 ) | 3.82 |
| | 07 | 05 | - | 12 | 2.70 | 2.00 | - | 4.4 ( 1.3 - 4.8 ) | 960 ( 250 - 1270 ) | 4.53 ( 1.52 - 5.90 ) | 92 ( 72 - 94 ) | 4.09 |
| | 10 | 05 | - | 15 | 3.73 | 1.87 | - | 4.4 ( 1.3 - 4.9 ) | 960 ( 250 - 1270 ) | 4.53 ( 1.52 - 5.90 ) | 92 ( 72 - 94 ) | 4.09 |
| | 13 | 05 | - | 18 | 4.00 | 1.60 | - | 4.4 ( 1.3 - 5.0 ) | 950 ( 250 - 1250 ) | 4.48 ( 1.52 - 5.81 ) | 92 ( 72 - 94 ) | 4.13 |
| | 07 | 07 | - | 14 | 2.70 | 2.70 | - | 4.4 ( 1.3 - 5.1 ) | 960 ( 250 - 1270 ) | 4.53 ( 1.52 - 5.90 ) | 92 ( 72 - 94 ) | 4.31 |
| | 10 | 07 | - | 17 | 3.34 | 2.26 | - | 4.4 ( 1.3 - 5.1 ) | 950 ( 250 - 1250 ) | 4.48 ( 1.52 - 5.81 ) | 92 ( 72 - 94 ) | 4.33 |
| | 13 | 07 | - | 20 | 3.64 | 1.96 | - | 4.4 ( 1.3 - 5.2 ) | 920 ( 250 - 1250 ) | 4.34 ( 1.52 - 5.81 ) | 92 ( 72 - 94 ) | 4.37 |
| | 10 | 10 | - | 20 | 2.80 | 2.80 | - | 4.4 ( 1.3 - 5.1 ) | 930 ( 250 - 1230 ) | 4.39 ( 1.52 - 5.71 ) | 92 ( 72 - 94 ) | 4.35 |
| | 13 | 10 | - | 23 | 2.30 | 2.10 | - | 4.4 ( 1.3 - 5.2 ) | 910 ( 250 - 1230 ) | 4.29 ( 1.52 - 5.71 ) | 92 ( 72 - 94 ) | 4.39 |
| | 13 | 13 | - | 26 | 2.20 | 2.20 | - | 4.4 ( 1.3 - 5.2 ) | 890 ( 250 - 1220 ) | 4.20 ( 1.52 - 5.65 ) | 92 ( 72 - 94 ) | 4.60 |

## Power supply voltage : 240V

| Operating status | Indoor unit | | | | Unit capacity (kW) | | | Total | | | | |
|---|---|---|---|---|---|---|---|---|---|---|---|---|
| | | | | | | | | Heating capacity (kW) | Power consumption (W) | Operating current (A) | Power factor (%) | Rated SCOP |
| | A | B | C | ΣkBTU | A | B | C | | | | | |
| 1 unit | 05 | - | - | 5 | 2.00 | - | - | 2.0 ( 0.9 - 2.5 ) | 440 ( 190 - 580 ) | 2.20 ( 1.10 - 2.64 ) | 84 ( 72 - 92 ) | - |
| | 07 | - | - | 7 | 2.70 | - | - | 2.7 ( 0.9 - 3.4 ) | 610 ( 190 - 820 ) | 3.04 ( 1.10 - 3.73 ) | 84 ( 72 - 92 ) | - |
| | 10 | - | - | 10 | 4.00 | - | - | 4.0 ( 0.9 - 4.8 ) | 1050 ( 190 - 1380 ) | 5.15 ( 1.10 - 6.20 ) | 85 ( 72 - 93 ) | - |
| | 13 | - | - | 13 | 4.40 | - | - | 4.4 ( 1.0 - 5.2 ) | 1350 ( 210 - 1410 ) | 6.55 ( 1.22 - 6.33 ) | 86 ( 72 - 93 ) | - |
| 2 units | 05 | 05 | - | 10 | 2.00 | 2.00 | - | 4.0 ( 1.3 - 4.7 ) | 920 ( 250 - 1270 ) | 4.17 ( 1.45 - 5.65 ) | 92 ( 72 - 94 ) | 3.82 |
| | 07 | 05 | - | 12 | 2.70 | 2.00 | - | 4.4 ( 1.3 - 4.8 ) | 960 ( 250 - 1270 ) | 4.35 ( 1.45 - 5.65 ) | 92 ( 72 - 94 ) | 4.09 |
| | 10 | 05 | - | 15 | 3.73 | 1.87 | - | 4.4 ( 1.3 - 4.9 ) | 960 ( 250 - 1270 ) | 4.35 ( 1.45 - 5.65 ) | 92 ( 72 - 94 ) | 4.09 |
| | 13 | 05 | - | 18 | 4.00 | 1.60 | - | 4.4 ( 1.3 - 5.0 ) | 950 ( 250 - 1250 ) | 4.30 ( 1.45 - 5.56 ) | 92 ( 72 - 94 ) | 4.13 |
| | 07 | 07 | - | 14 | 2.70 | 2.70 | - | 4.4 ( 1.3 - 5.1 ) | 960 ( 250 - 1270 ) | 4.35 ( 1.45 - 5.65 ) | 92 ( 72 - 94 ) | 4.31 |
| | 10 | 07 | - | 17 | 3.34 | 2.26 | - | 4.4 ( 1.3 - 5.1 ) | 950 ( 250 - 1250 ) | 4.30 ( 1.45 - 5.56 ) | 92 ( 72 - 94 ) | 4.33 |
| | 13 | 07 | - | 20 | 3.64 | 1.96 | - | 4.4 ( 1.3 - 5.2 ) | 920 ( 250 - 1250 ) | 4.17 ( 1.45 - 5.56 ) | 92 ( 72 - 94 ) | 4.37 |
| | 10 | 10 | - | 20 | 2.80 | 2.80 | - | 4.4 ( 1.3 - 5.1 ) | 930 ( 250 - 1230 ) | 4.21 ( 1.45 - 5.48 ) | 92 ( 72 - 94 ) | 4.35 |
| | 13 | 10 | - | 23 | 2.30 | 2.10 | - | 4.4 ( 1.3 - 5.2 ) | 910 ( 250 - 1230 ) | 4.12 ( 1.45 - 5.48 ) | 92 ( 72 - 94 ) | 4.39 |
| | 13 | 13 | - | 26 | 2.20 | 2.20 | - | 4.4 | 890 | 4.05 | 92 | 4.60 |

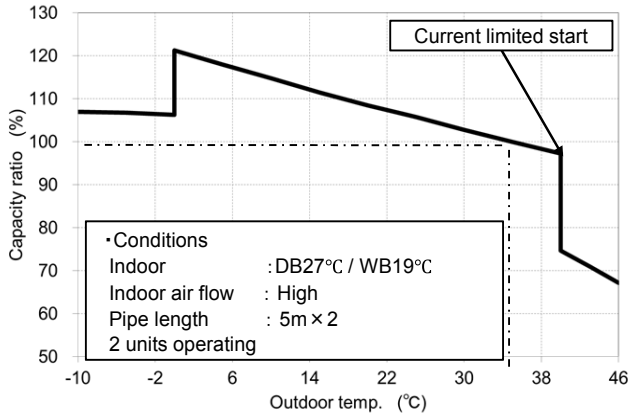
• Specification values are those under the condition as follows ;
Heating : Capacity test condition, inside : 20 °C (Db), outside : 7 °C (Db) / 6°C (Wb)
Piping length : 5 m per Indoor Unit.

# 3. Cooling / Heating Capacity Characteristic

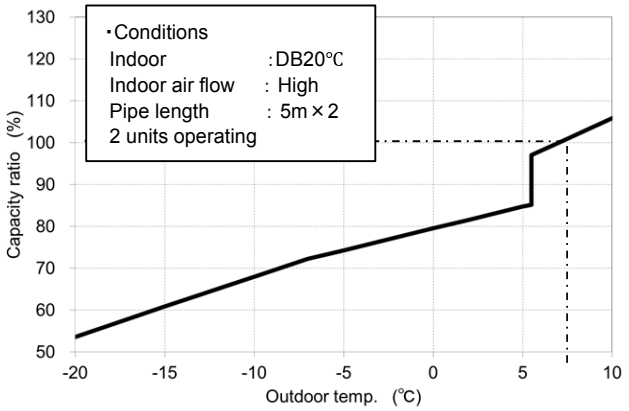
Connecting pipe length and lift difference between indoor units vs. capacity correction value.

Capacity variation ratio according to outdoor temperature

<Cooling>
RAS-2M14U2AVG-E

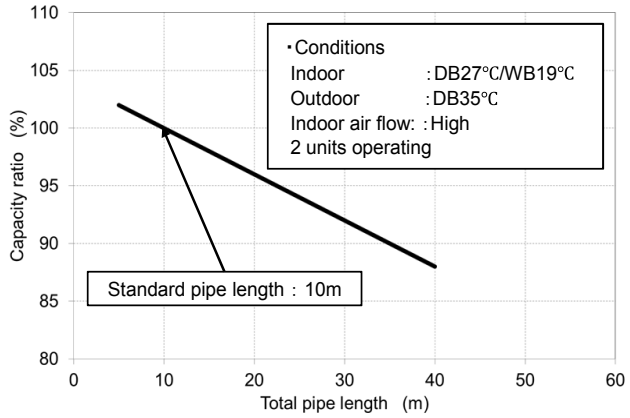



<Heating>
RAS-2M14U2AVG-E

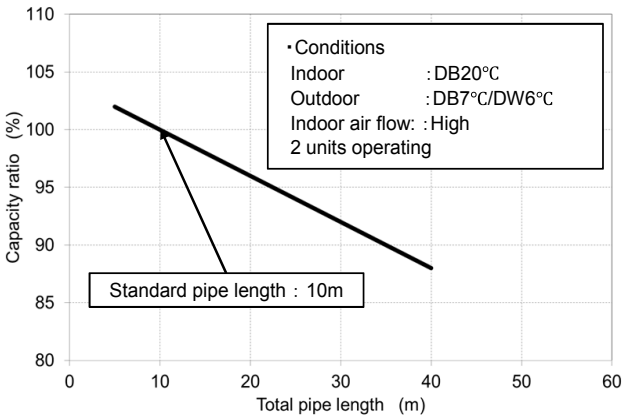



Capacity variation ratio according to pipe length

<Cooling>
RAS-2M14U2AVG-E

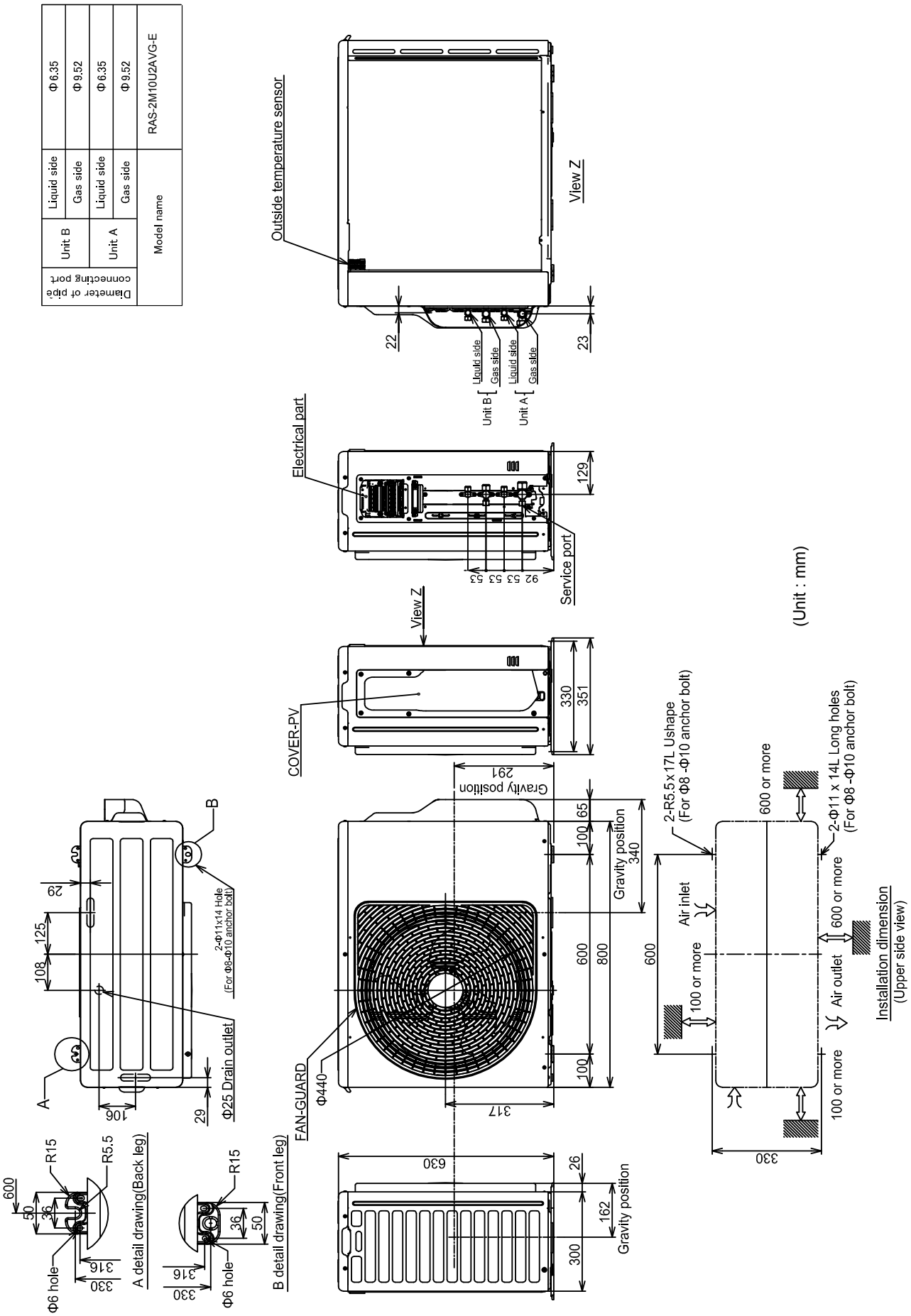



<Heating>
RAS-2M14U2AVG-E



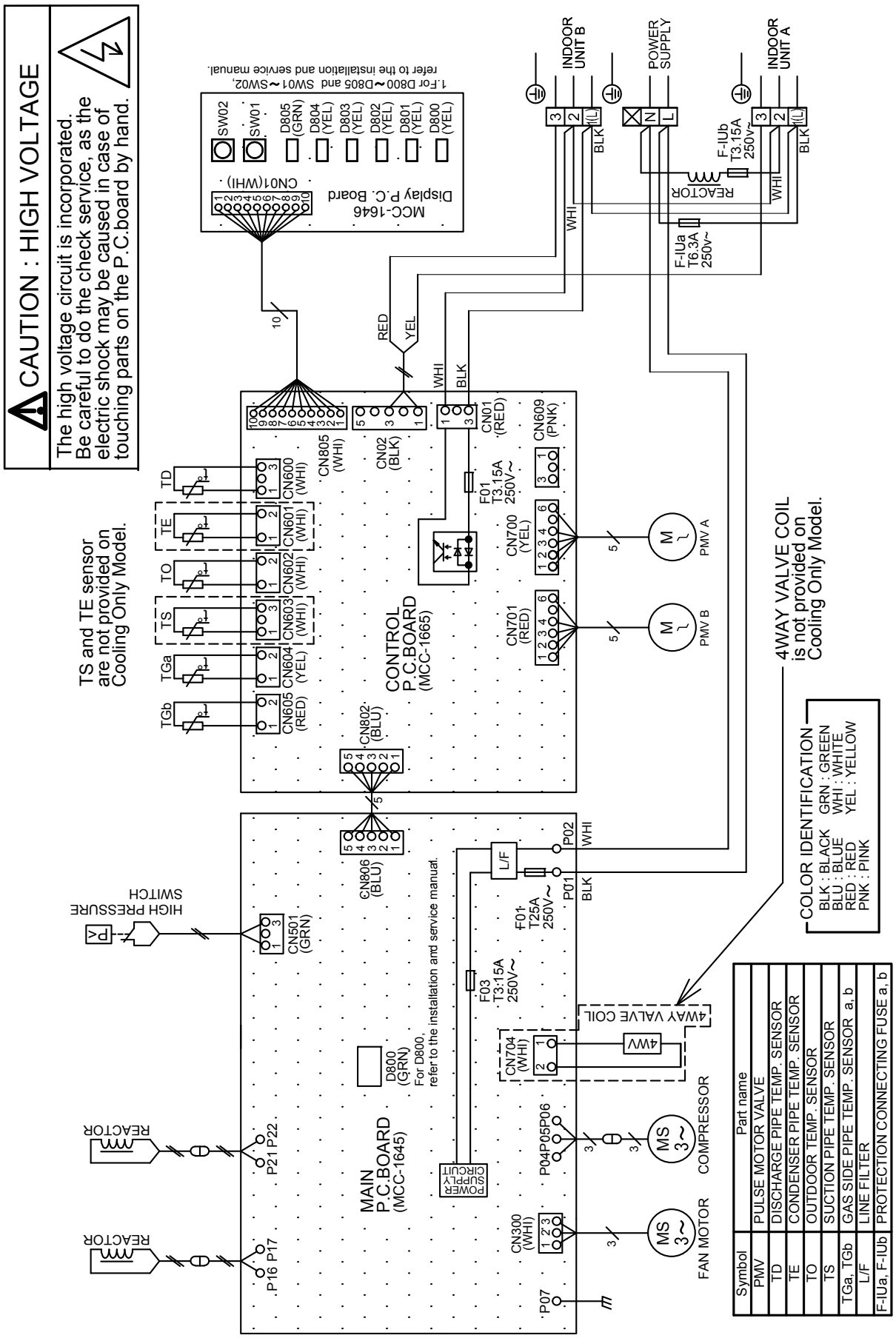
# 4. Dimension

**RAS-2M14U2AVG-E**



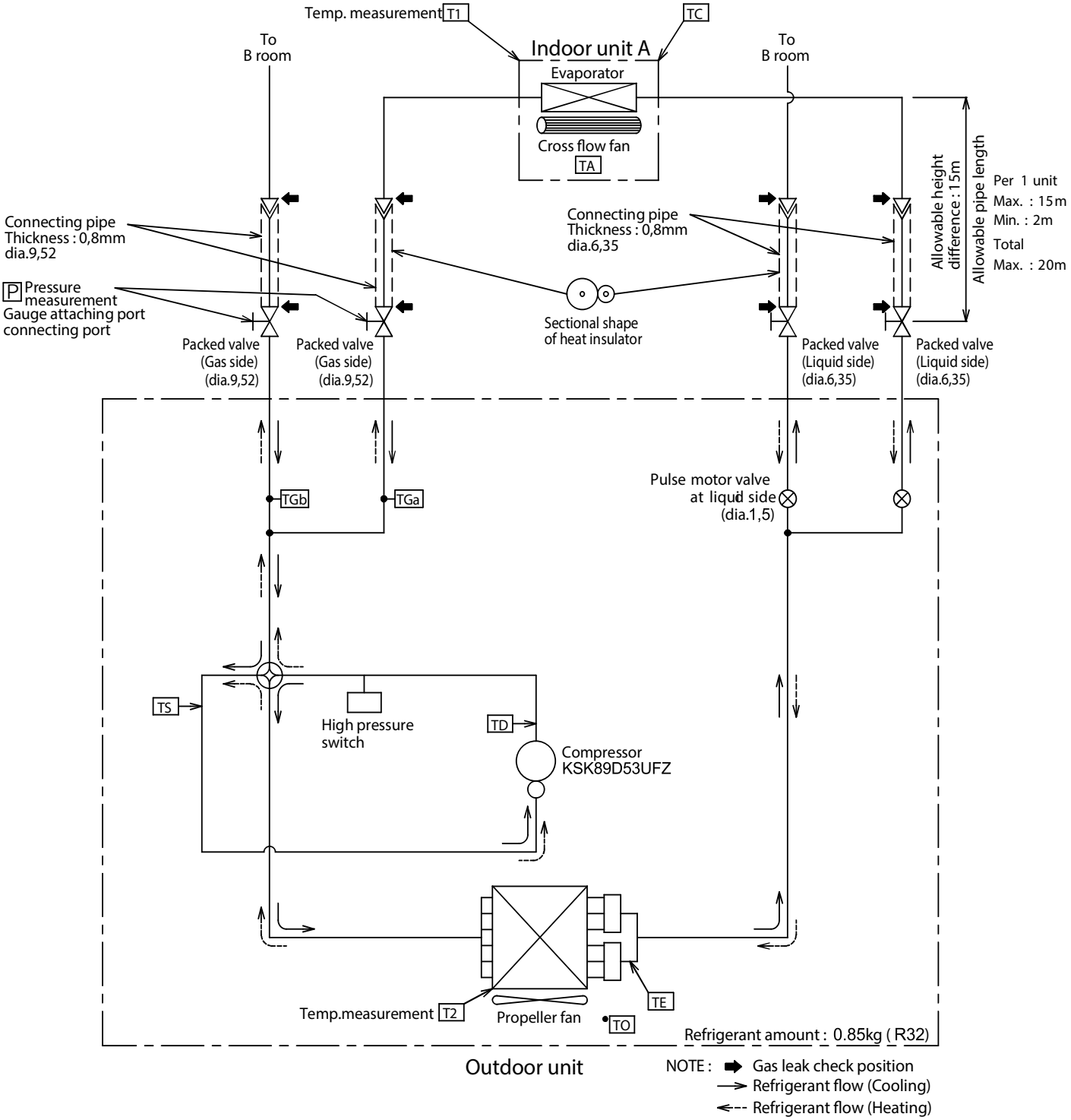
# 5. Wiring diagrams

**RAS-2M14U2AVG-E**



# 6. REFRIGERANT CYCLE DIAGRAM

**RAS-2M14U2AVG-E**




NOTE :

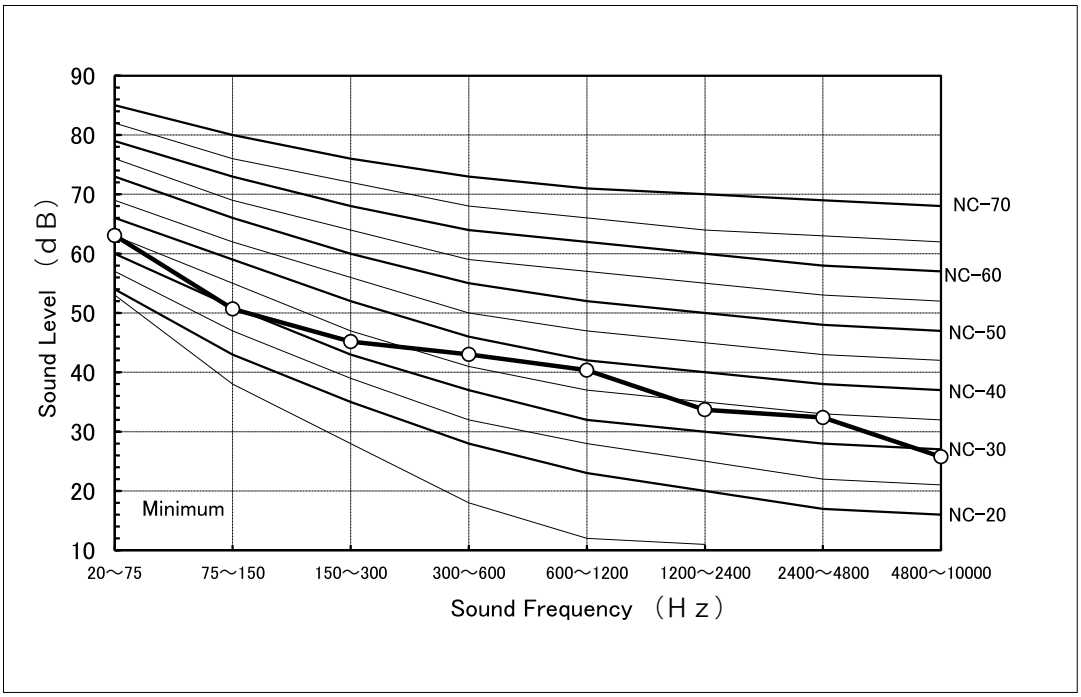
- You need not add refrigerant if the piping length is 20m or less.
- Connection of only one indoor unit is unavailable. Two indoor units should be connected.

# 7. Sound Characteristics (NC Curve)

RES-2M14U2AVG-E

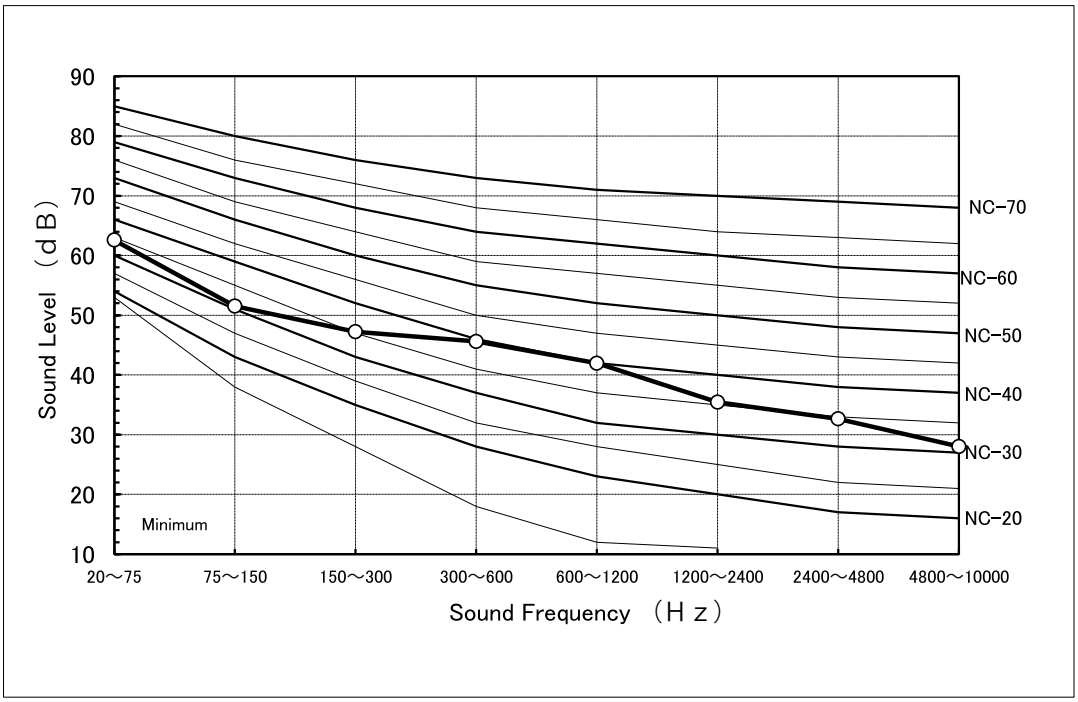
**Cooling**

| Specification （d B） | |
|---|---|
| Fan tap | Cooling |
| Sound pressure level (dB(A)) | 45 |




**Heating**

| Specification （d B） | |
|---|---|
| Fan tap | Heating |
| Sound pressure level (dB(A)) | 46 |



# 8. Capacity table

## Cooling

**2 - room multisplit : 1 - unit operation**

**Indoor units : 05 type**
**07 type**
**10 type**
**13 type**

**Outdoor unit : RAS-2M14U2AVG-E**

| Combination Capacity | Outdoor air temp [°C DB] | Indoor air temp [°C DB/WB ] | | | | | | | | | | | |
|---|---|---|---|---|---|---|---|---|---|---|---|---|---|
| | | 20.0 °C DB. / 14.0 °C WB. | | 23.0 °C DB. / 16.0 °C WB. | | 26.0 °C DB. / 18.0 °C WB. | | 27.0 °C DB. / 19.0 °C WB. | | 30.0 °C DB. / 22.0 °C WB. | | 32.0 °C DB. / 24.0 °C WB. | |
| | | TC [kW] | PI [kW] | TC [kW] | PI [kW] | TC [kW] | PI [kW] | TC [kW] | PI [kW] | TC [kW] | PI [kW] | TC [kW] | PI [kW] |
| 05 | 46 | 1.12 | 0.35 | 1.17 | 0.36 | 1.23 | 0.36 | **1.26** | **0.37** | 1.35 | 0.38 | 1.40 | 0.39 |
| | 43 | 1.19 | 0.33 | 1.26 | 0.34 | 1.32 | 0.34 | **1.35** | **0.35** | 1.44 | 0.36 | 1.51 | 0.37 |
| | 40 | 1.24 | 0.31 | 1.30 | 0.32 | 1.37 | 0.32 | **1.40** | **0.33** | 1.50 | 0.34 | 1.56 | 0.35 |
| | 35 | 1.33 | 0.29 | 1.40 | 0.30 | 1.46 | 0.30 | **1.50** | **0.31** | 1.61 | 0.32 | 1.67 | 0.33 |
| | 32 | 1.42 | 0.28 | 1.49 | 0.28 | 1.56 | 0.28 | **1.60** | **0.29** | 1.71 | 0.30 | 1.78 | 0.30 |
| | 25 | 1.50 | 0.26 | 1.57 | 0.26 | 1.65 | 0.26 | **1.69** | **0.27** | 1.81 | 0.28 | 1.88 | 0.28 |
| | 22 | 1.58 | 0.23 | 1.66 | 0.23 | 1.75 | 0.23 | **1.79** | **0.24** | 1.92 | 0.25 | 2.00 | 0.25 |
| 07 | 46 | 1.49 | 0.48 | 1.56 | 0.49 | 1.64 | 0.49 | **1.68** | **0.50** | 1.80 | 0.51 | 1.87 | 0.53 |
| | 43 | 1.58 | 0.45 | 1.66 | 0.46 | 1.75 | 0.46 | **1.79** | **0.47** | 1.92 | 0.48 | 2.00 | 0.49 |
| | 40 | 1.65 | 0.43 | 1.74 | 0.44 | 1.82 | 0.44 | **1.87** | **0.45** | 2.00 | 0.46 | 2.09 | 0.47 |
| | 35 | 1.77 | 0.40 | 1.86 | 0.41 | 1.95 | 0.41 | **2.00** | **0.42** | 2.14 | 0.43 | 2.23 | 0.44 |
| | 32 | 1.89 | 0.37 | 1.98 | 0.38 | 2.08 | 0.38 | **2.13** | **0.39** | 2.28 | 0.40 | 2.37 | 0.41 |
| | 25 | 2.00 | 0.34 | 2.10 | 0.35 | 2.20 | 0.35 | **2.26** | **0.36** | 2.42 | 0.37 | 2.52 | 0.38 |
| | 22 | 2.12 | 0.31 | 2.22 | 0.32 | 2.33 | 0.32 | **2.39** | **0.33** | 2.56 | 0.34 | 2.66 | 0.35 |
| 10 | 46 | 2.01 | 0.73 | 2.11 | 0.75 | 2.21 | 0.75 | **2.27** | **0.77** | 2.43 | 0.79 | 2.53 | 0.81 |
| | 43 | 2.14 | 0.67 | 2.25 | 0.69 | 2.36 | 0.69 | **2.42** | **0.71** | 2.59 | 0.73 | 2.70 | 0.75 |
| | 40 | 2.24 | 0.66 | 2.35 | 0.67 | 2.47 | 0.67 | **2.53** | **0.69** | 2.71 | 0.71 | 2.82 | 0.72 |
| | 35 | 2.39 | 0.61 | 2.51 | 0.62 | 2.63 | 0.62 | **2.70** | **0.64** | 2.89 | 0.66 | 3.01 | 0.67 |
| | 32 | 2.54 | 0.56 | 2.67 | 0.58 | 2.80 | 0.58 | **2.87** | **0.59** | 3.07 | 0.60 | 3.20 | 0.62 |
| | 25 | 2.70 | 0.52 | 2.84 | 0.54 | 2.97 | 0.54 | **3.05** | **0.55** | 3.26 | 0.56 | 3.40 | 0.58 |
| | 22 | 2.85 | 0.48 | 2.99 | 0.49 | 3.14 | 0.49 | **3.22** | **0.50** | 3.45 | 0.51 | 3.59 | 0.53 |
| 13 | 46 | 2.74 | 1.20 | 2.88 | 1.23 | 3.02 | 1.23 | **3.10** | **1.26** | 3.32 | 1.29 | 3.46 | 1.32 |
| | 43 | 2.94 | 1.11 | 3.09 | 1.14 | 3.24 | 1.14 | **3.32** | **1.17** | 3.55 | 1.20 | 3.70 | 1.23 |
| | 40 | 3.06 | 1.07 | 3.22 | 1.10 | 3.37 | 1.10 | **3.46** | **1.13** | 3.70 | 1.16 | 3.86 | 1.19 |
| | 35 | 3.27 | 1.00 | 3.44 | 1.02 | 3.61 | 1.02 | **3.70** | **1.05** | 3.96 | 1.08 | 4.13 | 1.10 |
| | 32 | 3.49 | 0.92 | 3.66 | 0.95 | 3.84 | 0.95 | **3.94** | **0.97** | 4.22 | 0.99 | 4.39 | 1.02 |
| | 25 | 3.69 | 0.86 | 3.88 | 0.88 | 4.07 | 0.88 | **4.17** | **0.90** | 4.46 | 0.92 | 4.65 | 0.95 |
| | 22 | 3.90 | 0.78 | 4.10 | 0.80 | 4.30 | 0.80 | **4.41** | **0.82** | 4.72 | 0.84 | 4.92 | 0.86 |

TC : Total capacity [kW]
PI ; Power input [kW]

# Cooling

**2 - room multisplit : 2 - unit operation**

**Indoor units : 05 type + 05 type 10 type + 07 type**
**07 type + 05 type 13 type + 07 type**
**10 type + 05 type 10 type + 10 type**
**13 type + 05 type 13 type + 10 type**
**07 type + 07 type 13 type + 13 type**

**Outdoor unit : RAS-2M14U2AVG-E**

| Combination Capacity | Outdoor air temp [°C DB] | Indoor air temp [°C DB/WB ] | | | | | | | | | | | |
|---|---|---|---|---|---|---|---|---|---|---|---|---|---|
| | | 20.0 °C DB. / 14.0 °C WB. | | 23.0 °C DB. / 16.0 °C WB. | | 26.0 °C DB. / 18.0 °C WB. | | 27.0 °C DB. / 19.0 °C WB. | | 30.0 °C DB. / 22.0 °C WB. | | 32.0 °C DB. / 24.0 °C WB. | |
| | | TC [kW] | PI [kW] | TC [kW] | PI [kW] | TC [kW] | PI [kW] | TC [kW] | PI [kW] | TC [kW] | PI [kW] | TC [kW] | PI [kW] |
| 05+05 | 46 | 2.52 | 1.09 | 2.52 | 1.09 | 2.52 | 1.09 | **2.52** | **1.09** | 2.52 | 1.09 | 2.52 | 1.09 |
| | 43 | 2.69 | 1.01 | 2.69 | 1.01 | 2.69 | 1.01 | **2.69** | **1.01** | 2.69 | 1.01 | 2.69 | 1.01 |
| | 40 | 2.81 | 0.98 | 2.81 | 0.98 | 2.81 | 0.98 | **2.81** | **0.98** | 2.81 | 0.98 | 2.81 | 0.98 |
| | 35 | 3.00 | 0.91 | 3.00 | 0.91 | 3.00 | 0.91 | **3.00** | **0.91** | 3.00 | 0.91 | 3.00 | 0.91 |
| | 32 | 3.19 | 0.84 | 3.19 | 0.84 | 3.19 | 0.84 | **3.19** | **0.84** | 3.19 | 0.84 | 3.19 | 0.84 |
| | 25 | 3.39 | 0.78 | 3.39 | 0.78 | 3.39 | 0.78 | **3.39** | **0.78** | 3.39 | 0.78 | 3.39 | 0.78 |
| | 22 | 3.58 | 0.71 | 3.58 | 0.71 | 3.58 | 0.71 | **3.58** | **0.71** | 3.58 | 0.71 | 3.58 | 0.71 |
| 07+05 | 46 | 2.94 | 1.15 | 2.94 | 1.15 | 2.94 | 1.15 | **2.94** | **1.15** | 2.94 | 1.15 | 2.94 | 1.15 |
| | 43 | 3.14 | 1.07 | 3.14 | 1.07 | 3.14 | 1.07 | **3.14** | **1.07** | 3.14 | 1.07 | 3.14 | 1.07 |
| | 40 | 3.28 | 1.03 | 3.28 | 1.03 | 3.28 | 1.03 | **3.28** | **1.03** | 3.28 | 1.03 | 3.28 | 1.03 |
| | 35 | 3.50 | 0.96 | 3.50 | 0.96 | 3.50 | 0.96 | **3.50** | **0.96** | 3.50 | 0.96 | 3.50 | 0.96 |
| | 32 | 3.72 | 0.89 | 3.72 | 0.89 | 3.72 | 0.89 | **3.72** | **0.89** | 3.72 | 0.89 | 3.72 | 0.89 |
| | 25 | 3.95 | 0.82 | 3.95 | 0.82 | 3.95 | 0.82 | **3.95** | **0.82** | 3.95 | 0.82 | 3.95 | 0.82 |
| | 22 | 4.17 | 0.75 | 4.17 | 0.75 | 4.17 | 0.75 | **4.17** | **0.75** | 4.17 | 0.75 | 4.17 | 0.75 |
| 10+05 | 46 | 3.36 | 1.23 | 3.36 | 1.23 | 3.36 | 1.23 | **3.36** | **1.23** | 3.36 | 1.23 | 3.36 | 1.23 |
| | 43 | 3.59 | 1.15 | 3.59 | 1.15 | 3.59 | 1.15 | **3.59** | **1.15** | 3.59 | 1.15 | 3.59 | 1.15 |
| | 40 | 3.74 | 1.10 | 3.74 | 1.10 | 3.74 | 1.10 | **3.74** | **1.10** | 3.74 | 1.10 | 3.74 | 1.10 |
| | 35 | 4.00 | 1.03 | 4.00 | 1.03 | 4.00 | 1.03 | **4.00** | **1.03** | 4.00 | 1.03 | 4.00 | 1.03 |
| | 32 | 4.26 | 0.96 | 4.26 | 0.96 | 4.26 | 0.96 | **4.26** | **0.96** | 4.26 | 0.96 | 4.26 | 0.96 |
| | 25 | 4.51 | 0.88 | 4.51 | 0.88 | 4.51 | 0.88 | **4.51** | **0.88** | 4.51 | 0.88 | 4.51 | 0.88 |
| | 22 | 4.77 | 0.81 | 4.77 | 0.81 | 4.77 | 0.81 | **4.77** | **0.81** | 4.77 | 0.81 | 4.77 | 0.81 |
| 13+05 | 46 | 3.36 | 1.15 | 3.36 | 1.15 | 3.36 | 1.15 | **3.36** | **1.15** | 3.36 | 1.15 | 3.36 | 1.15 |
| | 43 | 3.59 | 1.07 | 3.59 | 1.07 | 3.59 | 1.07 | **3.59** | **1.07** | 3.59 | 1.07 | 3.59 | 1.07 |
| | 40 | 3.74 | 1.03 | 3.74 | 1.03 | 3.74 | 1.03 | **3.74** | **1.03** | 3.74 | 1.03 | 3.74 | 1.03 |
| | 35 | 4.00 | 0.96 | 4.00 | 0.96 | 4.00 | 0.96 | **4.00** | **0.96** | 4.00 | 0.96 | 4.00 | 0.96 |
| | 32 | 4.26 | 0.89 | 4.26 | 0.89 | 4.26 | 0.89 | **4.26** | **0.89** | 4.26 | 0.89 | 4.26 | 0.89 |
| | 25 | 4.51 | 0.82 | 4.51 | 0.82 | 4.51 | 0.82 | **4.51** | **0.82** | 4.51 | 0.82 | 4.51 | 0.82 |
| | 22 | 4.77 | 0.75 | 4.77 | 0.75 | 4.77 | 0.75 | **4.77** | **0.75** | 4.77 | 0.75 | 4.77 | 0.75 |
| 07+07 | 46 | 3.36 | 1.23 | 3.36 | 1.23 | 3.36 | 1.23 | **3.36** | **1.23** | 3.36 | 1.23 | 3.36 | 1.23 |
| | 43 | 3.59 | 1.15 | 3.59 | 1.15 | 3.59 | 1.15 | **3.59** | **1.15** | 3.59 | 1.15 | 3.59 | 1.15 |
| | 40 | 3.74 | 1.10 | 3.74 | 1.10 | 3.74 | 1.10 | **3.74** | **1.10** | 3.74 | 1.10 | 3.74 | 1.10 |
| | 35 | 4.00 | 1.03 | 4.00 | 1.03 | 4.00 | 1.03 | **4.00** | **1.03** | 4.00 | 1.03 | 4.00 | 1.03 |
| | 32 | 4.26 | 0.96 | 4.26 | 0.96 | 4.26 | 0.96 | **4.26** | **0.96** | 4.26 | 0.96 | 4.26 | 0.96 |
| | 25 | 4.51 | 0.88 | 4.51 | 0.88 | 4.51 | 0.88 | **4.51** | **0.88** | 4.51 | 0.88 | 4.51 | 0.88 |
| | 22 | 4.77 | 0.81 | 4.77 | 0.81 | 4.77 | 0.81 | **4.77** | **0.81** | 4.77 | 0.81 | 4.77 | 0.81 |
| 10+07 | 46 | 3.36 | 1.15 | 3.36 | 1.15 | 3.36 | 1.15 | **3.36** | **1.15** | 3.36 | 1.15 | 3.36 | 1.15 |
| | 43 | 3.59 | 1.07 | 3.59 | 1.07 | 3.59 | 1.07 | **3.59** | **1.07** | 3.59 | 1.07 | 3.59 | 1.07 |
| | 40 | 3.74 | 1.03 | 3.74 | 1.03 | 3.74 | 1.03 | **3.74** | **1.03** | 3.74 | 1.03 | 3.74 | 1.03 |
| | 35 | 4.00 | 0.96 | 4.00 | 0.96 | 4.00 | 0.96 | **4.00** | **0.96** | 4.00 | 0.96 | 4.00 | 0.96 |
| | 32 | 4.26 | 0.89 | 4.26 | 0.89 | 4.26 | 0.89 | **4.26** | **0.89** | 4.26 | 0.89 | 4.26 | 0.89 |
| | 25 | 4.51 | 0.82 | 4.51 | 0.82 | 4.51 | 0.82 | **4.51** | **0.82** | 4.51 | 0.82 | 4.51 | 0.82 |
| | 22 | 4.77 | 0.75 | 4.77 | 0.75 | 4.77 | 0.75 | **4.77** | **0.75** | 4.77 | 0.75 | 4.77 | 0.75 |
| 13+07 | 46 | 0.00 | 1.13 | 3.36 | 1.13 | 3.36 | 1.13 | **3.36** | **1.13** | 3.36 | 1.13 | 3.36 | 1.13 |
| | 43 | 3.59 | 1.05 | 3.59 | 1.05 | 3.59 | 1.05 | **3.59** | **1.05** | 3.59 | 1.05 | 3.59 | 1.05 |
| | 40 | 3.74 | 1.01 | 3.74 | 1.01 | 3.74 | 1.01 | **3.74** | **1.01** | 3.74 | 1.01 | 3.74 | 1.01 |
| | 35 | 4.00 | 0.94 | 4.00 | 0.94 | 4.00 | 0.94 | **4.00** | **0.94** | 4.00 | 0.94 | 4.00 | 0.94 |
| | 32 | 4.26 | 0.87 | 4.26 | 0.87 | 4.26 | 0.87 | **4.26** | **0.87** | 4.26 | 0.87 | 4.26 | 0.87 |
| | 25 | 4.51 | 0.81 | 4.51 | 0.81 | 4.51 | 0.81 | **4.51** | **0.81** | 4.51 | 0.81 | 4.51 | 0.81 |
| | 22 | 4.77 | 0.74 | 4.77 | 0.74 | 4.77 | 0.74 | **4.77** | **0.74** | 4.77 | 0.74 | 4.77 | 0.74 |
| 10+10 | 46 | 3.36 | 1.13 | 3.36 | 1.13 | 3.36 | 1.13 | **3.36** | **1.13** | 3.36 | 1.13 | 3.36 | 1.13 |
| | 43 | 3.59 | 1.05 | 3.59 | 1.05 | 3.59 | 1.05 | **3.59** | **1.05** | 3.59 | 1.05 | 3.59 | 1.05 |
| | 40 | 3.74 | 1.01 | 3.74 | 1.01 | 3.74 | 1.01 | **3.74** | **1.01** | 3.74 | 1.01 | 3.74 | 1.01 |
| | 35 | 4.00 | 0.94 | 4.00 | 0.94 | 4.00 | 0.94 | **4.00** | **0.94** | 4.00 | 0.94 | 4.00 | 0.94 |
| | 32 | 4.26 | 0.87 | 4.26 | 0.87 | 4.26 | 0.87 | **4.26** | **0.87** | 4.26 | 0.87 | 4.26 | 0.87 |
| | 25 | 4.51 | 0.81 | 4.51 | 0.81 | 4.51 | 0.81 | **4.51** | **0.81** | 4.51 | 0.81 | 4.51 | 0.81 |
| | 22 | 4.77 | 0.74 | 4.77 | 0.74 | 4.77 | 0.74 | **4.77** | **0.74** | 4.77 | 0.74 | 4.77 | 0.74 |
| 13+10 | 46 | 3.36 | 1.11 | 3.36 | 1.11 | 3.36 | 1.11 | **3.36** | **1.11** | 3.36 | 1.11 | 3.36 | 1.11 |
| | 43 | 3.59 | 1.04 | 3.59 | 1.04 | 3.59 | 1.04 | **3.59** | **1.04** | 3.59 | 1.04 | 3.59 | 1.04 |
| | 40 | 3.74 | 1.00 | 3.74 | 1.00 | 3.74 | 1.00 | **3.74** | **1.00** | 3.74 | 1.00 | 3.74 | 1.00 |
| | 35 | 4.00 | 0.93 | 4.00 | 0.93 | 4.00 | 0.93 | **4.00** | **0.93** | 4.00 | 0.93 | 4.00 | 0.93 |
| | 32 | 4.26 | 0.86 | 4.26 | 0.86 | 4.26 | 0.86 | **4.26** | **0.86** | 4.26 | 0.86 | 4.26 | 0.86 |
| | 25 | 4.51 | 0.80 | 4.51 | 0.80 | 4.51 | 0.80 | **4.51** | **0.80** | 4.51 | 0.80 | 4.51 | 0.80 |
| | 22 | 4.77 | 0.73 | 4.77 | 0.73 | 4.77 | 0.73 | **4.77** | **0.73** | 4.77 | 0.73 | 4.77 | 0.73 |
| 13+13 | 46 | 3.36 | 1.10 | 3.36 | 1.10 | 3.36 | 1.10 | **3.36** | **1.10** | 3.36 | 1.10 | 3.36 | 1.10 |
| | 43 | 3.59 | 1.03 | 3.59 | 1.03 | 3.59 | 1.03 | **3.59** | **1.03** | 3.59 | 1.03 | 3.59 | 1.03 |
| | 40 | 3.74 | 0.99 | 3.74 | 0.99 | 3.74 | 0.99 | **3.74** | **0.99** | 3.74 | 0.99 | 3.74 | 0.99 |
| | 35 | 4.00 | 0.92 | 4.00 | 0.92 | 4.00 | 0.92 | **4.00** | **0.92** | 4.00 | 0.92 | 4.00 | 0.92 |
| | 32 | 4.26 | 0.85 | 4.26 | 0.85 | 4.26 | 0.85 | **4.26** | **0.85** | 4.26 | 0.85 | 4.26 | 0.85 |
| | 25 | 4.51 | 0.79 | 4.51 | 0.79 | 4.51 | 0.79 | **4.51** | **0.79** | 4.51 | 0.79 | 4.51 | 0.79 |
| | 22 | 4.77 | 0.72 | 4.77 | 0.72 | 4.77 | 0.72 | **4.77** | **0.72** | 4.77 | 0.72 | 4.77 | 0.72 |

TC : Total capacity [kW]
PI ; Power input [kW]

# Heating

**2 - room multisplit : 1 - unit operation**

**Indoor units : 05 type**
**07 type**
**10 type**
**13 type**

**Outdoor unit : RAS-2M14U2AVG-E**

| Combination Capacity | Outdoor air temp [°C WB] | Indoor air temp [°C DB ] | | | | | | | | | | | |
|---|---|---|---|---|---|---|---|---|---|---|---|---|---|
| | | 16.0 °C DB | | 18.0 °C DB | | 20.0 °C DB | | 21.0 °C DB. | | 22.0 °C DB | | 24.0 °C DB | |
| | | TC [kW] | PI [kW] | TC [kW] | PI [kW] | TC [kW] | PI [kW] | TC [kW] | PI [kW] | TC [kW] | PI [kW] | TC [kW] | PI [kW] |
| 05 | 20 | 2.58 | 0.47 | 2.55 | 0.47 | **2.51** | **0.48** | 2.49 | 0.48 | 2.47 | 0.48 | 2.44 | 0.49 |
| | 15 | 2.38 | 0.46 | 2.35 | 0.46 | **2.32** | **0.47** | 2.30 | 0.47 | 2.29 | 0.47 | 2.25 | 0.48 |
| | 10 | 2.17 | 0.44 | 2.15 | 0.44 | **2.12** | **0.45** | 2.10 | 0.45 | 2.09 | 0.45 | 2.06 | 0.46 |
| | 7 | 2.05 | 0.43 | 2.03 | 0.43 | **2.00** | **0.44** | 1.99 | 0.44 | 1.97 | 0.44 | 1.94 | 0.45 |
| | 5.5 | 1.75 | 0.40 | 1.74 | 0.40 | **1.71** | **0.41** | 1.70 | 0.41 | 1.68 | 0.41 | 1.66 | 0.42 |
| | 5 | 1.65 | 0.40 | 1.63 | 0.40 | **1.61** | **0.41** | 1.60 | 0.41 | 1.59 | 0.41 | 1.56 | 0.42 |
| | 2 | 1.50 | 0.38 | 1.48 | 0.39 | **1.46** | **0.39** | 1.45 | 0.39 | 1.44 | 0.39 | 1.42 | 0.40 |
| | 0 | 1.40 | 0.37 | 1.38 | 0.38 | **1.36** | **0.38** | 1.35 | 0.38 | 1.34 | 0.38 | 1.32 | 0.39 |
| | -5 | 1.13 | 0.34 | 1.12 | 0.35 | **1.10** | **0.35** | 1.09 | 0.35 | 1.08 | 0.35 | 1.07 | 0.36 |
| | -7 | 1.03 | 0.33 | 1.01 | 0.34 | **1.00** | **0.34** | 0.99 | 0.34 | 0.99 | 0.34 | 0.97 | 0.35 |
| | -10 | 1.08 | 0.34 | 1.07 | 0.35 | **1.05** | **0.35** | 1.04 | 0.35 | 1.03 | 0.35 | 1.02 | 0.36 |
| | -15 | 0.88 | 0.33 | 0.87 | 0.34 | **0.86** | **0.34** | 0.85 | 0.34 | 0.85 | 0.34 | 0.83 | 0.35 |
| | -20 | 0.57 | 0.30 | 0.57 | 0.30 | **0.56** | **0.30** | 0.56 | 0.30 | 0.55 | 0.30 | 0.54 | 0.30 |
| 07 | 20 | 3.48 | 0.66 | 3.44 | 0.66 | **3.39** | **0.67** | 3.36 | 0.67 | 3.34 | 0.67 | 3.29 | 0.68 |
| | 15 | 3.21 | 0.64 | 3.18 | 0.64 | **3.13** | **0.65** | 3.11 | 0.65 | 3.08 | 0.65 | 3.04 | 0.66 |
| | 10 | 2.93 | 0.61 | 2.90 | 0.61 | **2.86** | **0.62** | 2.84 | 0.62 | 2.82 | 0.62 | 2.78 | 0.63 |
| | 7 | 2.77 | 0.60 | 2.74 | 0.60 | **2.70** | **0.61** | 2.68 | 0.61 | 2.66 | 0.61 | 2.62 | 0.62 |
| | 5.5 | 2.36 | 0.56 | 2.33 | 0.56 | **2.30** | **0.57** | 2.28 | 0.57 | 2.27 | 0.57 | 2.23 | 0.58 |
| | 5 | 2.22 | 0.56 | 2.19 | 0.56 | **2.16** | **0.57** | 2.14 | 0.57 | 2.13 | 0.57 | 2.10 | 0.58 |
| | 2 | 2.01 | 0.53 | 1.99 | 0.53 | **1.96** | **0.54** | 1.95 | 0.54 | 1.93 | 0.54 | 1.90 | 0.55 |
| | 0 | 1.87 | 0.52 | 1.85 | 0.52 | **1.82** | **0.53** | 1.81 | 0.53 | 1.79 | 0.53 | 1.77 | 0.54 |
| | -5 | 1.52 | 0.48 | 1.50 | 0.48 | **1.48** | **0.49** | 1.47 | 0.49 | 1.46 | 0.49 | 1.44 | 0.50 |
| | -7 | 1.39 | 0.46 | 1.37 | 0.46 | **1.35** | **0.47** | 1.34 | 0.47 | 1.33 | 0.47 | 1.31 | 0.48 |
| | -10 | 1.46 | 0.48 | 1.44 | 0.48 | **1.42** | **0.49** | 1.41 | 0.49 | 1.40 | 0.49 | 1.38 | 0.50 |
| | -15 | 1.19 | 0.46 | 1.18 | 0.46 | **1.16** | **0.47** | 1.15 | 0.47 | 1.14 | 0.47 | 1.13 | 0.48 |
| | -20 | 0.78 | 0.40 | 0.77 | 0.40 | **0.76** | **0.41** | 0.75 | 0.41 | 0.75 | 0.41 | 0.74 | 0.42 |
| 10 | 20 | 5.16 | 1.14 | 5.10 | 1.15 | **5.03** | **1.16** | 4.99 | 1.16 | 4.96 | 1.17 | 4.88 | 1.18 |
| | 15 | 4.75 | 1.10 | 4.70 | 1.11 | **4.63** | **1.12** | 4.60 | 1.12 | 4.56 | 1.13 | 4.49 | 1.14 |
| | 10 | 4.35 | 1.05 | 4.30 | 1.06 | **4.24** | **1.07** | 4.21 | 1.07 | 4.18 | 1.08 | 4.11 | 1.09 |
| | 7 | 4.10 | 1.03 | 4.06 | 1.04 | **4.00** | **1.05** | 3.97 | 1.05 | 3.94 | 1.06 | 3.88 | 1.07 |
| | 5.5 | 3.50 | 0.96 | 3.46 | 0.97 | **3.41** | **0.98** | 3.38 | 0.98 | 3.36 | 0.99 | 3.31 | 1.00 |
| | 5 | 3.29 | 0.95 | 3.26 | 0.96 | **3.21** | **0.97** | 3.19 | 0.97 | 3.16 | 0.97 | 3.11 | 0.99 |
| | 2 | 2.99 | 0.92 | 2.95 | 0.92 | **2.91** | **0.93** | 2.89 | 0.93 | 2.87 | 0.93 | 2.82 | 0.95 |
| | 0 | 2.77 | 0.90 | 2.74 | 0.90 | **2.70** | **0.91** | 2.68 | 0.91 | 2.66 | 0.91 | 2.62 | 0.92 |
| | -5 | 2.26 | 0.83 | 2.23 | 0.83 | **2.20** | **0.84** | 2.18 | 0.84 | 2.17 | 0.84 | 2.13 | 0.85 |
| | -7 | 2.05 | 0.80 | 2.03 | 0.80 | **2.00** | **0.81** | 1.99 | 0.81 | 1.97 | 0.81 | 1.94 | 0.82 |
| | -10 | 2.16 | 0.84 | 2.14 | 0.84 | **2.11** | **0.85** | 2.09 | 0.85 | 2.08 | 0.85 | 2.05 | 0.86 |
| | -15 | 1.75 | 0.79 | 1.74 | 0.79 | **1.71** | **0.80** | 1.70 | 0.80 | 1.68 | 0.80 | 1.66 | 0.81 |
| | -20 | 1.15 | 0.70 | 1.14 | 0.70 | **1.12** | **0.71** | 1.11 | 0.71 | 1.10 | 0.71 | 1.09 | 0.72 |
| 13 | 20 | 5.67 | 1.47 | 5.61 | 1.47 | **5.53** | **1.49** | 5.49 | 1.49 | 5.45 | 1.50 | 5.37 | 1.51 |
| | 15 | 5.23 | 1.41 | 5.18 | 1.41 | **5.10** | **1.43** | 5.06 | 1.43 | 5.02 | 1.44 | 4.95 | 1.45 |
| | 10 | 4.78 | 1.36 | 4.73 | 1.36 | **4.66** | **1.38** | 4.63 | 1.38 | 4.59 | 1.39 | 4.52 | 1.40 |
| | 7 | 4.51 | 1.33 | 4.47 | 1.33 | **4.40** | **1.35** | 4.37 | 1.35 | 4.33 | 1.36 | 4.27 | 1.37 |
| | 5.5 | 3.85 | 1.24 | 3.81 | 1.24 | **3.75** | **1.26** | 3.72 | 1.26 | 3.69 | 1.27 | 3.64 | 1.28 |
| | 5 | 3.62 | 1.23 | 3.58 | 1.23 | **3.53** | **1.25** | 3.50 | 1.25 | 3.48 | 1.26 | 3.43 | 1.27 |
| | 2 | 3.28 | 1.18 | 3.25 | 1.19 | **3.20** | **1.20** | 3.18 | 1.20 | 3.15 | 1.21 | 3.11 | 1.22 |
| | 0 | 3.05 | 1.15 | 3.01 | 1.16 | **2.97** | **1.17** | 2.95 | 1.17 | 2.93 | 1.18 | 2.88 | 1.19 |
| | -5 | 2.48 | 1.06 | 2.46 | 1.07 | **2.42** | **1.08** | 2.40 | 1.08 | 2.38 | 1.09 | 2.35 | 1.10 |
| | -7 | 2.26 | 1.02 | 2.23 | 1.03 | **2.20** | **1.04** | 2.18 | 1.04 | 2.17 | 1.05 | 2.13 | 1.06 |
| | -10 | 2.38 | 1.07 | 2.35 | 1.08 | **2.32** | **1.09** | 2.30 | 1.09 | 2.29 | 1.10 | 2.25 | 1.11 |
| | -15 | 1.93 | 1.01 | 1.91 | 1.02 | **1.88** | **1.03** | 1.87 | 1.03 | 1.85 | 1.04 | 1.82 | 1.05 |
| | -20 | 1.26 | 0.91 | 1.25 | 0.91 | **1.23** | **0.92** | 1.22 | 0.92 | 1.21 | 0.92 | 1.19 | 0.93 |

TC : Total capacity [kW]
PI ; Power input [kW]

# Heating

**2 - room multisplit : 2 - unit operation**

**Indoor units : 05 type + 05 type**
**07 type + 05 type**
**10 type + 05 type**
**13 type + 05 type**
**07 type + 07 type**

**Outdoor unit : RAS-2M14U2AVG-E**

| Combination Capacity | Outdoor air temp [°C WB] | Indoor air temp [°C DB ] | | | | | | | | | | | |
|---|---|---|---|---|---|---|---|---|---|---|---|---|---|
| | | 16.0 °C DB | | 18.0 °C DB | | 20.0 °C DB | | 21.0 °C DB. | | 22.0 °C DB | | 24.0 °C DB | |
| | | TC [kW] | PI [kW] | TC [kW] | PI [kW] | TC [kW] | PI [kW] | TC [kW] | PI [kW] | TC [kW] | PI [kW] | TC [kW] | PI [kW] |
| 05+05 | 20 | 5.16 | 1.08 | 5.10 | 1.09 | **5.03** | **1.10** | 4.99 | 1.10 | 4.96 | 1.11 | 4.88 | 1.12 |
| | 15 | 4.75 | 0.96 | 4.70 | 0.97 | **4.63** | **0.98** | 4.60 | 0.98 | 4.56 | 0.99 | 4.49 | 1.00 |
| | 10 | 4.35 | 0.92 | 4.30 | 0.93 | **4.24** | **0.94** | 4.21 | 0.94 | 4.18 | 0.94 | 4.11 | 0.96 |
| | 7 | 4.10 | 0.91 | 4.06 | 0.91 | **4.00** | **0.92** | 3.97 | 0.92 | 3.94 | 0.92 | 3.88 | 0.93 |
| | 5.5 | 3.50 | 0.85 | 3.46 | 0.85 | **3.41** | **0.86** | 3.38 | 0.86 | 3.36 | 0.86 | 3.31 | 0.87 |
| | 5 | 3.29 | 0.84 | 3.26 | 0.84 | **3.21** | **0.85** | 3.19 | 0.85 | 3.16 | 0.85 | 3.11 | 0.86 |
| | 2 | 2.99 | 0.81 | 2.95 | 0.81 | **2.91** | **0.82** | 2.89 | 0.82 | 2.87 | 0.82 | 2.82 | 0.83 |
| | 0 | 2.77 | 0.79 | 2.74 | 0.79 | **2.70** | **0.80** | 2.68 | 0.80 | 2.66 | 0.80 | 2.62 | 0.81 |
| | -5 | 2.26 | 0.73 | 2.23 | 0.73 | **2.20** | **0.74** | 2.18 | 0.74 | 2.17 | 0.74 | 2.13 | 0.75 |
| | -7 | 2.05 | 0.70 | 2.03 | 0.70 | **2.00** | **0.71** | 1.99 | 0.71 | 1.97 | 0.71 | 1.94 | 0.72 |
| | -10 | 2.16 | 0.73 | 2.14 | 0.73 | **2.11** | **0.74** | 2.09 | 0.74 | 2.08 | 0.74 | 2.05 | 0.75 |
| | -15 | 1.75 | 0.70 | 1.74 | 0.70 | **1.71** | **0.71** | 1.70 | 0.71 | 1.68 | 0.71 | 1.66 | 0.72 |
| | -20 | 1.15 | 0.62 | 1.14 | 0.62 | **1.12** | **0.63** | 1.11 | 0.63 | 1.10 | 0.63 | 1.09 | 0.64 |
| 07+05 | 20 | 5.67 | 1.04 | 5.61 | 1.05 | **5.53** | **1.06** | 5.49 | 1.06 | 5.45 | 1.07 | 5.37 | 1.08 |
| | 15 | 5.23 | 1.00 | 5.18 | 1.01 | **5.10** | **1.02** | 5.06 | 1.02 | 5.02 | 1.03 | 4.95 | 1.04 |
| | 10 | 4.78 | 0.96 | 4.73 | 0.97 | **4.66** | **0.98** | 4.63 | 0.98 | 4.59 | 0.99 | 4.52 | 1.00 |
| | 7 | 4.56 | 0.94 | 4.51 | 0.95 | **4.44** | **0.96** | 4.41 | 0.96 | 4.37 | 0.96 | 4.31 | 0.98 |
| | 5.5 | 3.85 | 0.89 | 3.81 | 0.89 | **3.75** | **0.90** | 3.72 | 0.90 | 3.69 | 0.90 | 3.64 | 0.91 |
| | 5 | 3.62 | 0.88 | 3.58 | 0.88 | **3.53** | **0.89** | 3.50 | 0.89 | 3.48 | 0.89 | 3.43 | 0.90 |
| | 2 | 3.28 | 0.85 | 3.25 | 0.85 | **3.20** | **0.86** | 3.18 | 0.86 | 3.15 | 0.86 | 3.11 | 0.87 |
| | 0 | 3.05 | 0.82 | 3.01 | 0.82 | **2.97** | **0.83** | 2.95 | 0.83 | 2.93 | 0.83 | 2.88 | 0.84 |
| | -5 | 2.48 | 0.76 | 2.46 | 0.76 | **2.42** | **0.77** | 2.40 | 0.77 | 2.38 | 0.77 | 2.35 | 0.78 |
| | -7 | 2.26 | 0.74 | 2.23 | 0.74 | **2.20** | **0.75** | 2.18 | 0.75 | 2.17 | 0.75 | 2.13 | 0.76 |
| | -10 | 2.38 | 0.76 | 2.35 | 0.76 | **2.32** | **0.77** | 2.30 | 0.77 | 2.29 | 0.77 | 2.25 | 0.78 |
| | -15 | 1.93 | 0.73 | 1.91 | 0.73 | **1.88** | **0.74** | 1.87 | 0.74 | 1.85 | 0.74 | 1.82 | 0.75 |
| | -20 | 1.26 | 0.64 | 1.25 | 0.64 | **1.23** | **0.65** | 1.22 | 0.65 | 1.21 | 0.65 | 1.19 | 0.66 |
| 10+05 | 20 | 5.67 | 1.04 | 5.61 | 1.05 | **5.53** | **1.06** | 5.49 | 1.06 | 5.45 | 1.07 | 5.37 | 1.08 |
| | 15 | 5.23 | 1.00 | 5.18 | 1.01 | **5.10** | **1.02** | 5.06 | 1.02 | 5.02 | 1.03 | 4.95 | 1.04 |
| | 10 | 4.78 | 0.96 | 4.73 | 0.97 | **4.66** | **0.98** | 4.63 | 0.98 | 4.59 | 0.99 | 4.52 | 1.00 |
| | 7 | 4.51 | 0.94 | 4.47 | 0.95 | **4.40** | **0.96** | 4.37 | 0.96 | 4.33 | 0.96 | 4.27 | 0.98 |
| | 5.5 | 3.85 | 0.89 | 3.81 | 0.89 | **3.75** | **0.90** | 3.72 | 0.90 | 3.69 | 0.90 | 3.64 | 0.91 |
| | 5 | 3.62 | 0.88 | 3.58 | 0.88 | **3.53** | **0.89** | 3.50 | 0.89 | 3.48 | 0.89 | 3.43 | 0.90 |
| | 2 | 3.28 | 0.85 | 3.25 | 0.85 | **3.20** | **0.86** | 3.18 | 0.86 | 3.15 | 0.86 | 3.11 | 0.87 |
| | 0 | 3.05 | 0.82 | 3.01 | 0.82 | **2.97** | **0.83** | 2.95 | 0.83 | 2.93 | 0.83 | 2.88 | 0.84 |
| | -5 | 2.48 | 0.76 | 2.46 | 0.76 | **2.42** | **0.77** | 2.40 | 0.77 | 2.38 | 0.77 | 2.35 | 0.78 |
| | -7 | 2.26 | 0.74 | 2.23 | 0.74 | **2.20** | **0.75** | 2.18 | 0.75 | 2.17 | 0.75 | 2.13 | 0.76 |
| | -10 | 2.38 | 0.76 | 2.35 | 0.76 | **2.32** | **0.77** | 2.30 | 0.77 | 2.29 | 0.77 | 2.25 | 0.78 |
| | -15 | 1.93 | 0.73 | 1.91 | 0.73 | **1.88** | **0.74** | 1.87 | 0.74 | 1.85 | 0.74 | 1.82 | 0.75 |
| | -20 | 1.26 | 0.64 | 1.25 | 0.64 | **1.23** | **0.65** | 1.22 | 0.65 | 1.21 | 0.65 | 1.19 | 0.66 |
| 13+05 | 20 | 5.67 | 1.03 | 5.61 | 1.04 | **5.53** | **1.05** | 5.49 | 1.05 | 5.45 | 1.06 | 5.37 | 1.07 |
| | 15 | 5.23 | 0.99 | 5.18 | 1.00 | **5.10** | **1.01** | 5.06 | 1.01 | 5.02 | 1.02 | 4.95 | 1.03 |
| | 10 | 4.78 | 0.95 | 4.73 | 0.96 | **4.66** | **0.97** | 4.63 | 0.97 | 4.59 | 0.97 | 4.52 | 0.99 |
| | 7 | 4.51 | 0.93 | 4.47 | 0.94 | **4.40** | **0.95** | 4.37 | 0.95 | 4.33 | 0.95 | 4.27 | 0.97 |
| | 5.5 | 3.85 | 0.88 | 3.81 | 0.88 | **3.75** | **0.89** | 3.72 | 0.89 | 3.69 | 0.89 | 3.64 | 0.90 |
| | 5 | 3.62 | 0.87 | 3.58 | 0.87 | **3.53** | **0.88** | 3.50 | 0.88 | 3.48 | 0.88 | 3.43 | 0.89 |
| | 2 | 3.28 | 0.84 | 3.25 | 0.84 | **3.20** | **0.85** | 3.18 | 0.85 | 3.15 | 0.85 | 3.11 | 0.86 |
| | 0 | 3.05 | 0.81 | 3.01 | 0.81 | **2.97** | **0.82** | 2.95 | 0.82 | 2.93 | 0.82 | 2.88 | 0.83 |
| | -5 | 2.48 | 0.75 | 2.46 | 0.75 | **2.42** | **0.76** | 2.40 | 0.76 | 2.38 | 0.76 | 2.35 | 0.77 |
| | -7 | 2.26 | 0.73 | 2.23 | 0.73 | **2.20** | **0.74** | 2.18 | 0.74 | 2.17 | 0.74 | 2.13 | 0.75 |
| | -10 | 2.38 | 0.76 | 2.35 | 0.76 | **2.32** | **0.77** | 2.30 | 0.77 | 2.29 | 0.77 | 2.25 | 0.78 |
| | -15 | 1.93 | 0.72 | 1.91 | 0.72 | **1.88** | **0.73** | 1.87 | 0.73 | 1.85 | 0.73 | 1.82 | 0.74 |
| | -20 | 1.26 | 0.64 | 1.25 | 0.64 | **1.23** | **0.65** | 1.22 | 0.65 | 1.21 | 0.65 | 1.19 | 0.66 |
| 07+07 | 20 | 5.67 | 1.04 | 5.61 | 1.05 | **5.53** | **1.06** | 5.49 | 1.06 | 5.45 | 1.07 | 5.37 | 1.08 |
| | 15 | 5.23 | 1.00 | 5.18 | 1.01 | **5.10** | **1.02** | 5.06 | 1.02 | 5.02 | 1.03 | 4.95 | 1.04 |
| | 10 | 4.78 | 0.96 | 4.73 | 0.97 | **4.66** | **0.98** | 4.63 | 0.98 | 4.59 | 0.99 | 4.52 | 1.00 |
| | 7 | 4.51 | 0.94 | 4.47 | 0.95 | **4.40** | **0.96** | 4.37 | 0.96 | 4.33 | 0.96 | 4.27 | 0.98 |
| | 5.5 | 3.85 | 0.89 | 3.81 | 0.89 | **3.75** | **0.90** | 3.72 | 0.90 | 3.69 | 0.90 | 3.64 | 0.91 |
| | 5 | 3.62 | 0.88 | 3.58 | 0.88 | **3.53** | **0.89** | 3.50 | 0.89 | 3.48 | 0.89 | 3.43 | 0.90 |
| | 2 | 3.28 | 0.85 | 3.25 | 0.85 | **3.20** | **0.86** | 3.18 | 0.86 | 3.15 | 0.86 | 3.11 | 0.87 |
| | 0 | 3.05 | 0.82 | 3.01 | 0.82 | **2.97** | **0.83** | 2.95 | 0.83 | 2.93 | 0.83 | 2.88 | 0.84 |
| | -5 | 2.48 | 0.76 | 2.46 | 0.76 | **2.42** | **0.77** | 2.40 | 0.77 | 2.38 | 0.77 | 2.35 | 0.78 |
| | -7 | 2.26 | 0.74 | 2.23 | 0.74 | **2.20** | **0.75** | 2.18 | 0.75 | 2.17 | 0.75 | 2.13 | 0.76 |
| | -10 | 2.38 | 0.76 | 2.35 | 0.76 | **2.32** | **0.77** | 2.30 | 0.77 | 2.29 | 0.77 | 2.25 | 0.78 |
| | -15 | 1.93 | 0.73 | 1.91 | 0.73 | **1.88** | **0.74** | 1.87 | 0.74 | 1.85 | 0.74 | 1.82 | 0.75 |
| | -20 | 1.26 | 0.64 | 1.25 | 0.64 | **1.23** | **0.65** | 1.22 | 0.65 | 1.21 | 0.65 | 1.19 | 0.66 |

TC : Total capacity [kW]
PI ; Power input [kW]

# Heating

**2 - room multisplit : 2 - unit operation**

**Indoor units : 10 type + 07 type**
**13 type + 07 type**
**10 type + 10 type**
**13 type + 10 type**
**13 type + 13 type**

**Outdoor unit : RAS-2M14U2AVG-E**

| Combination Capacity | Outdoor air temp [°C WB] | Indoor air temp [°C DB ] | | | | | | | | | | | |
|---|---|---|---|---|---|---|---|---|---|---|---|---|---|
| | | 16.0 °C DB | | 18.0 °C DB | | 20.0 °C DB | | 21.0 °C DB. | | 22.0 °C DB | | 24.0 °C DB | |
| | | TC [kW] | PI [kW] | TC [kW] | PI [kW] | TC [kW] | PI [kW] | TC [kW] | PI [kW] | TC [kW] | PI [kW] | TC [kW] | PI [kW] |
| 10+07 | 20 | 5.67 | 1.03 | 5.61 | 1.04 | **5.53** | **1.05** | 5.49 | 1.05 | 5.45 | 1.06 | 5.37 | 1.07 |
| | 15 | 5.23 | 0.99 | 5.18 | 1.00 | **5.10** | **1.01** | 5.06 | 1.01 | 5.02 | 1.02 | 4.95 | 1.03 |
| | 10 | 4.78 | 0.95 | 4.73 | 0.96 | **4.66** | **0.97** | 4.63 | 0.97 | 4.59 | 0.97 | 4.52 | 0.99 |
| | 7 | 4.51 | 0.93 | 4.47 | 0.94 | **4.40** | **0.95** | 4.37 | 0.95 | 4.33 | 0.95 | 4.27 | 0.97 |
| | 5.5 | 3.85 | 0.88 | 3.81 | 0.88 | **3.75** | **0.89** | 3.72 | 0.89 | 3.69 | 0.89 | 3.64 | 0.90 |
| | 5 | 3.62 | 0.87 | 3.58 | 0.87 | **3.53** | **0.88** | 3.50 | 0.88 | 3.48 | 0.88 | 3.43 | 0.89 |
| | 2 | 3.28 | 0.84 | 3.25 | 0.84 | **3.20** | **0.85** | 3.18 | 0.85 | 3.15 | 0.85 | 3.11 | 0.86 |
| | 0 | 3.05 | 0.81 | 3.01 | 0.81 | **2.97** | **0.82** | 2.95 | 0.82 | 2.93 | 0.82 | 2.88 | 0.83 |
| | -5 | 2.48 | 0.75 | 2.46 | 0.75 | **2.42** | **0.76** | 2.40 | 0.76 | 2.38 | 0.76 | 2.35 | 0.77 |
| | -7 | 2.26 | 0.73 | 2.23 | 0.73 | **2.20** | **0.74** | 2.18 | 0.74 | 2.17 | 0.74 | 2.13 | 0.75 |
| | -10 | 2.38 | 0.76 | 2.35 | 0.76 | **2.32** | **0.77** | 2.30 | 0.77 | 2.29 | 0.77 | 2.25 | 0.78 |
| | -15 | 1.93 | 0.72 | 1.91 | 0.72 | **1.88** | **0.73** | 1.87 | 0.73 | 1.85 | 0.73 | 1.82 | 0.74 |
| | -20 | 1.26 | 0.64 | 1.25 | 0.64 | **1.23** | **0.65** | 1.22 | 0.65 | 1.21 | 0.65 | 1.19 | 0.66 |
| 13+07 | 20 | 5.67 | 0.99 | 5.61 | 1.00 | **5.53** | **1.01** | 5.49 | 1.01 | 5.45 | 1.02 | 5.37 | 1.03 |
| | 15 | 5.23 | 0.96 | 5.18 | 0.97 | **5.10** | **0.98** | 5.06 | 0.98 | 5.02 | 0.99 | 4.95 | 1.00 |
| | 10 | 4.78 | 0.92 | 4.73 | 0.93 | **4.66** | **0.94** | 4.63 | 0.94 | 4.59 | 0.94 | 4.52 | 0.96 |
| | 7 | 4.51 | 0.91 | 4.47 | 0.91 | **4.40** | **0.92** | 4.37 | 0.92 | 4.33 | 0.92 | 4.27 | 0.93 |
| | 5.5 | 3.85 | 0.85 | 3.81 | 0.85 | **3.75** | **0.86** | 3.72 | 0.86 | 3.69 | 0.86 | 3.64 | 0.87 |
| | 5 | 3.62 | 0.84 | 3.58 | 0.84 | **3.53** | **0.85** | 3.50 | 0.85 | 3.48 | 0.85 | 3.43 | 0.86 |
| | 2 | 3.28 | 0.81 | 3.25 | 0.81 | **3.20** | **0.82** | 3.18 | 0.82 | 3.15 | 0.82 | 3.11 | 0.83 |
| | 0 | 3.05 | 0.79 | 3.01 | 0.79 | **2.97** | **0.80** | 2.95 | 0.80 | 2.93 | 0.80 | 2.88 | 0.81 |
| | -5 | 2.48 | 0.73 | 2.46 | 0.73 | **2.42** | **0.74** | 2.40 | 0.74 | 2.38 | 0.74 | 2.35 | 0.75 |
| | -7 | 2.26 | 0.70 | 2.23 | 0.70 | **2.20** | **0.71** | 2.18 | 0.71 | 2.17 | 0.71 | 2.13 | 0.72 |
| | -10 | 2.38 | 0.73 | 2.35 | 0.73 | **2.32** | **0.74** | 2.30 | 0.74 | 2.29 | 0.74 | 2.25 | 0.75 |
| | -15 | 1.93 | 0.70 | 1.91 | 0.70 | **1.88** | **0.71** | 1.87 | 0.71 | 1.85 | 0.71 | 1.82 | 0.72 |
| | -20 | 1.26 | 0.62 | 1.25 | 0.62 | **1.23** | **0.63** | 1.22 | 0.63 | 1.21 | 0.63 | 1.19 | 0.64 |
| 10+10 | 20 | 5.67 | 1.00 | 5.61 | 1.01 | **5.53** | **1.02** | 5.49 | 1.02 | 5.45 | 1.03 | 5.37 | 1.04 |
| | 15 | 5.23 | 0.97 | 5.18 | 0.98 | **5.10** | **0.99** | 5.06 | 0.99 | 5.02 | 1.00 | 4.95 | 1.01 |
| | 10 | 4.78 | 0.93 | 4.73 | 0.94 | **4.66** | **0.95** | 4.63 | 0.95 | 4.59 | 0.95 | 4.52 | 0.97 |
| | 7 | 4.51 | 0.92 | 4.47 | 0.92 | **4.40** | **0.93** | 4.37 | 0.93 | 4.33 | 0.93 | 4.27 | 0.95 |
| | 5.5 | 3.85 | 0.86 | 3.81 | 0.86 | **3.75** | **0.87** | 3.72 | 0.87 | 3.69 | 0.87 | 3.64 | 0.88 |
| | 5 | 3.62 | 0.85 | 3.58 | 0.85 | **3.53** | **0.86** | 3.50 | 0.86 | 3.48 | 0.86 | 3.43 | 0.87 |
| | 2 | 3.28 | 0.82 | 3.25 | 0.82 | **3.20** | **0.83** | 3.18 | 0.83 | 3.15 | 0.83 | 3.11 | 0.84 |
| | 0 | 3.05 | 0.79 | 3.01 | 0.79 | **2.97** | **0.80** | 2.95 | 0.80 | 2.93 | 0.80 | 2.88 | 0.81 |
| | -5 | 2.48 | 0.74 | 2.46 | 0.74 | **2.42** | **0.75** | 2.40 | 0.75 | 2.38 | 0.75 | 2.35 | 0.76 |
| | -7 | 2.26 | 0.71 | 2.23 | 0.71 | **2.20** | **0.72** | 2.18 | 0.72 | 2.17 | 0.72 | 2.13 | 0.73 |
| | -10 | 2.38 | 0.74 | 2.35 | 0.74 | **2.32** | **0.75** | 2.30 | 0.75 | 2.29 | 0.75 | 2.25 | 0.76 |
| | -15 | 1.93 | 0.70 | 1.91 | 0.70 | **1.88** | **0.71** | 1.87 | 0.71 | 1.85 | 0.71 | 1.82 | 0.72 |
| | -20 | 1.26 | 0.62 | 1.25 | 0.62 | **1.23** | **0.63** | 1.22 | 0.63 | 1.21 | 0.63 | 1.19 | 0.64 |
| 13+10 | 20 | 5.67 | 0.98 | 5.61 | 0.99 | **5.53** | **1.00** | 5.49 | 1.00 | 5.45 | 1.01 | 5.37 | 1.02 |
| | 15 | 5.23 | 0.95 | 5.18 | 0.96 | **5.10** | **0.97** | 5.06 | 0.97 | 5.02 | 0.97 | 4.95 | 0.99 |
| | 10 | 4.78 | 0.92 | 4.73 | 0.92 | **4.66** | **0.93** | 4.63 | 0.93 | 4.59 | 0.93 | 4.52 | 0.95 |
| | 7 | 4.51 | 0.90 | 4.47 | 0.90 | **4.40** | **0.91** | 4.37 | 0.91 | 4.33 | 0.91 | 4.27 | 0.92 |
| | 5.5 | 3.85 | 0.84 | 3.81 | 0.84 | **3.75** | **0.85** | 3.72 | 0.85 | 3.69 | 0.85 | 3.64 | 0.86 |
| | 5 | 3.62 | 0.83 | 3.58 | 0.83 | **3.53** | **0.84** | 3.50 | 0.84 | 3.48 | 0.84 | 3.43 | 0.85 |
| | 2 | 3.28 | 0.80 | 3.25 | 0.80 | **3.20** | **0.81** | 3.18 | 0.81 | 3.15 | 0.81 | 3.11 | 0.82 |
| | 0 | 3.05 | 0.78 | 3.01 | 0.78 | **2.97** | **0.79** | 2.95 | 0.79 | 2.93 | 0.79 | 2.88 | 0.80 |
| | -5 | 2.48 | 0.72 | 2.46 | 0.72 | **2.42** | **0.73** | 2.40 | 0.73 | 2.38 | 0.73 | 2.35 | 0.74 |
| | -7 | 2.26 | 0.69 | 2.23 | 0.69 | **2.20** | **0.70** | 2.18 | 0.70 | 2.17 | 0.70 | 2.13 | 0.71 |
| | -10 | 2.38 | 0.72 | 2.35 | 0.72 | **2.32** | **0.73** | 2.30 | 0.73 | 2.29 | 0.73 | 2.25 | 0.74 |
| | -15 | 1.93 | 0.69 | 1.91 | 0.69 | **1.88** | **0.70** | 1.87 | 0.70 | 1.85 | 0.70 | 1.82 | 0.71 |
| | -20 | 1.26 | 0.61 | 1.25 | 0.61 | **1.23** | **0.62** | 1.22 | 0.62 | 1.21 | 0.62 | 1.19 | 0.63 |
| 13+13 | 20 | 5.67 | 0.96 | 5.61 | 0.97 | **5.53** | **0.98** | 5.49 | 0.98 | 5.45 | 0.99 | 5.37 | 1.00 |
| | 15 | 5.23 | 0.93 | 5.18 | 0.94 | **5.10** | **0.95** | 5.06 | 0.95 | 5.02 | 0.95 | 4.95 | 0.97 |
| | 10 | 4.78 | 0.90 | 4.73 | 0.90 | **4.66** | **0.91** | 4.63 | 0.91 | 4.59 | 0.91 | 4.52 | 0.92 |
| | 7 | 4.51 | 0.88 | 4.47 | 0.88 | **4.40** | **0.89** | 4.37 | 0.89 | 4.33 | 0.89 | 4.27 | 0.90 |
| | 5.5 | 3.85 | 0.82 | 3.81 | 0.82 | **3.75** | **0.83** | 3.72 | 0.83 | 3.69 | 0.83 | 3.64 | 0.84 |
| | 5 | 3.62 | 0.81 | 3.58 | 0.81 | **3.53** | **0.82** | 3.50 | 0.82 | 3.48 | 0.82 | 3.43 | 0.83 |
| | 2 | 3.28 | 0.78 | 3.25 | 0.78 | **3.20** | **0.79** | 3.18 | 0.79 | 3.15 | 0.79 | 3.11 | 0.80 |
| | 0 | 3.05 | 0.76 | 3.01 | 0.76 | **2.97** | **0.77** | 2.95 | 0.77 | 2.93 | 0.77 | 2.88 | 0.78 |
| | -5 | 2.48 | 0.70 | 2.46 | 0.70 | **2.42** | **0.71** | 2.40 | 0.71 | 2.38 | 0.71 | 2.35 | 0.72 |
| | -7 | 2.26 | 0.68 | 2.23 | 0.68 | **2.20** | **0.69** | 2.18 | 0.69 | 2.17 | 0.69 | 2.13 | 0.70 |
| | -10 | 2.38 | 0.71 | 2.35 | 0.71 | **2.32** | **0.72** | 2.30 | 0.72 | 2.29 | 0.72 | 2.25 | 0.73 |
| | -15 | 1.93 | 0.67 | 1.91 | 0.67 | **1.88** | **0.68** | 1.87 | 0.68 | 1.85 | 0.68 | 1.82 | 0.69 |
| | -20 | 1.26 | 0.59 | 1.25 | 0.59 | **1.23** | **0.60** | 1.22 | 0.60 | 1.21 | 0.60 | 1.19 | 0.61 |

TC : Total capacity [kW]
PI ; Power input [kW]

TOSHIBA CARRIER (THAILAND) CO.,LTD.
144/9 Moo 5, Bangkadi Industrial Park, Tivanon Road, Tambol Bangkadi,
Amphur Muang, Pathumthani 12000, Thailand
Copyright © 2015 TOSHIBA CARRIER (THAILAND), All Rights Reserved

Notice : Toshiba is committed to continuously improving its products to ensure the highest quality and reliability standard, and to meet local regulations and market requirements. All features and specifications are subject to change without prior notice.